REVISIONS						
ZONE	REV	ECN	DESCRIPTION	DATE	DRAWN	APP'D
	A	1134736	INITIAL RELEASE	2020-10-07	YJ	LT

	PART NUMBER	DESCRIPTION
1	32170953	FILTER ASSEMBLY
2	32170979	FILTER ELEMENT
3	CT-9480	AFTERCOOLER TUBE
4	CT-9479	AFTERCOOLER TUBE
5	447-4523	PUMP ASSEMBLY
6	445-2-1	FLYWHEEL - 20" OD
7	EG-9487	BELT GUARD ASSEMBLY
8	MS-340-43	MAG STARTER 200/230-60-3
	MS-340-45	MAG STARTER 460-60-3
9	MO-6614	MOTOR 200-60-3
	MO-6635	MOTOR 230/460-60-3
10	PU-9091	MOTOR PULLEY
11	BT-9032	BELTS (2)
12	SSS-9005U120150	PRESSURE SWITCH
13	GA-250	PRESSURE GAUGE
14	TIA-5200	SAFETY VALVE 200 PSI
15	VA-9411	DRAIN VALVE
16	TA-9499-IR	TANK - 120 GAL VERT
17	VA-9705	BALL VALVE
18	CCV-9408	CHECK VALVE
19	CT-9487	CHECK VALVE TUBE
20	OM-9700	OIL MONITOR ASSY
21	AD-9400	PNEUMATIC AUTODRAIN

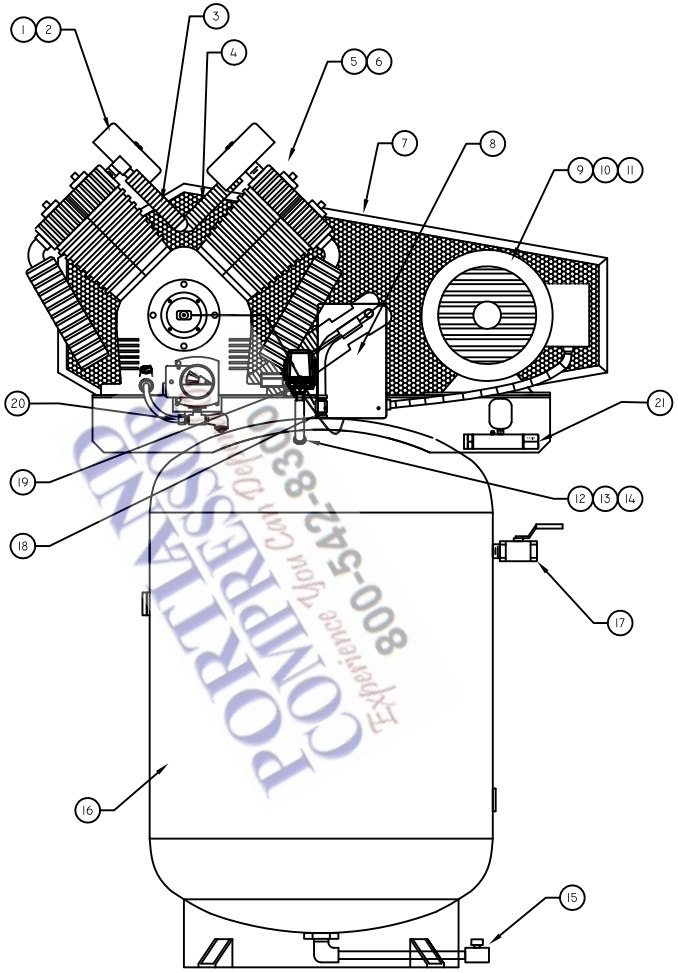

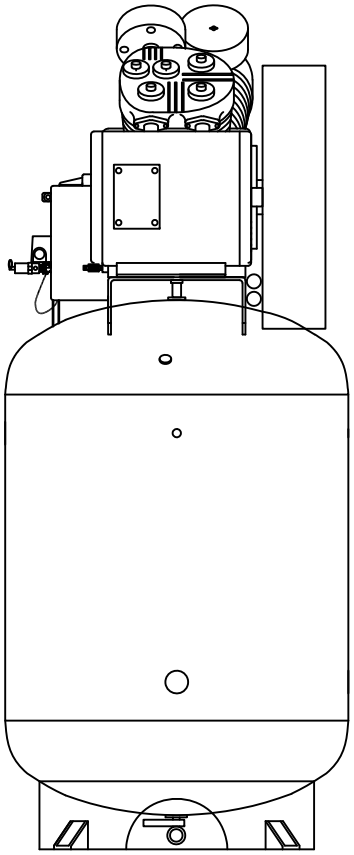

PORTLAND COMPRESSOR
Experience you can depend on
800-542-8300

STANDARD TOLERANCES

ALL DIMENSIONS ARE IN MILLIMETERS [INCHES (IF SHOWN)]

UNSPECIFIED TOLERANCES:

WHOLE :	± 1
ONE PLACE (.X) :	± 0.5
TWO PLACE (.XX) :	± 0.25
ANGLES (.X) :	± 1°

Ingersoll Rand Industrial Technologies

WARNING: THE EXPORT OR REEXPORT OF THIS DRAWING OR A PRODUCT PRODUCED BY THIS DRAWING IS SUBJECT TO U.S. EXPORT ADMINISTRATION REGULATIONS AND OTHER APPLICABLE GOVERNMENT RESTRICTIONS OR REGULATIONS.

PROPRIETARY NOTICE

THIS DRAWING CONTAINS CONFIDENTIAL AND TRADE SECRET INFORMATION. IS THE PROPERTY OF INGERSOLL-RAND CO., AND IS GIVEN TO THE RECEIVER IN CONFIDENCE. THE RECEIVER BY RECEPTION AND RETENTION OF THE DRAWING ACCEPTS THE DRAWING IN CONFIDENCE AND AGREES THAT, EXCEPT AS AUTHORIZED IN WRITING BY INGERSOLL-RAND CO. IT WILL (1) NOT USE THE DRAWING OR ANY COPY THEREOF OR THE CONFIDENTIAL OR TRADE SECRET INFORMATION THEREIN; (2) NOT COPY THE DRAWING; (3) NOT DISCLOSE TO OTHERS EITHER THE DRAWING OR THE CONFIDENTIAL OR TRADE SECRET INFORMATION THEREIN; AND (4) UPON COMPLETION OF THE NEED TO RETAIN THE DRAWING, OR UPON DEMAND, RETURN THE DRAWING, ALL COPIES THEREOF, AND ALL MATERIAL COPIED THEREFROM.

DO NOT SCALE DRAWING

DRAWING CONFORMS TO ASME Y14.5M - 1994

CAD GENERATED DRAWING, NO MANUAL REVISIONS ALLOWED

UNLESS OTHERWISE SPECIFIED:
- REMOVE ALL BURRS AND SHARP CORNERS
- WELD SYMBOLS TO BE IN ACCORDANCE WITH ANSI/AWS A2.4

COPYRIGHT @ 2009
INGERSOLL-RAND COMPANY
ALL RIGHTS RESERVED

THIRD ANGLE PROJECTION

		DATE
DRAWN	YJ	2020-10-07
CHECKED	LT	2020-10-07
APPROVED	LT	2020-10-07

Ingersoll Rand

TITLE: **COMPRESSOR PARTS LIST**

447PK10

SIZE	DWG NO.	REV
A1	447PK10-PL 001	A

PART NO.

SCALE: NONE | UNITS: | SHEET 1 OF 1

UNLESS OTHERWISE SPECIFIED PRINTED DOCUMENT IS UNCONTROLLED