Codice / Code / Code / Kode / Codigo
9828093049 03
Edizione / Edition / Edition / Ausgabe / Edición
03/2019

CPVSD (C55*DD) - cULus / cCSAus -
CPVSD D (C55*DD) - cULus / cCSAus -
CPVSD - CPVSD D (C55*DD) - cULus / cCSAus - With autotransformer (See pag. 70)

CATALOGO RICAMBI
SPARES LIST
CATALOGUE PIECES DETACHEES
ERSATZTEILKATALOG
CATÁLOGO DE PIEZAS DE RECAMBIO

Con kit di manutenzione
With service kit
Avec kit a maintenance
Mit Wartungsaufbausatz
Con kit de mantenimiento

HP 10 - 15 - 20
kW 7,5 - 11 - 15

COMPRESSORI INDUSTRIALI
INDUSTRIAL COMPRESSORS
COMPRESSEURS INDUSTRIELS
INDUSTRIELLE KOMPRESSOREN
COMPRESOR INDUSTRIAL

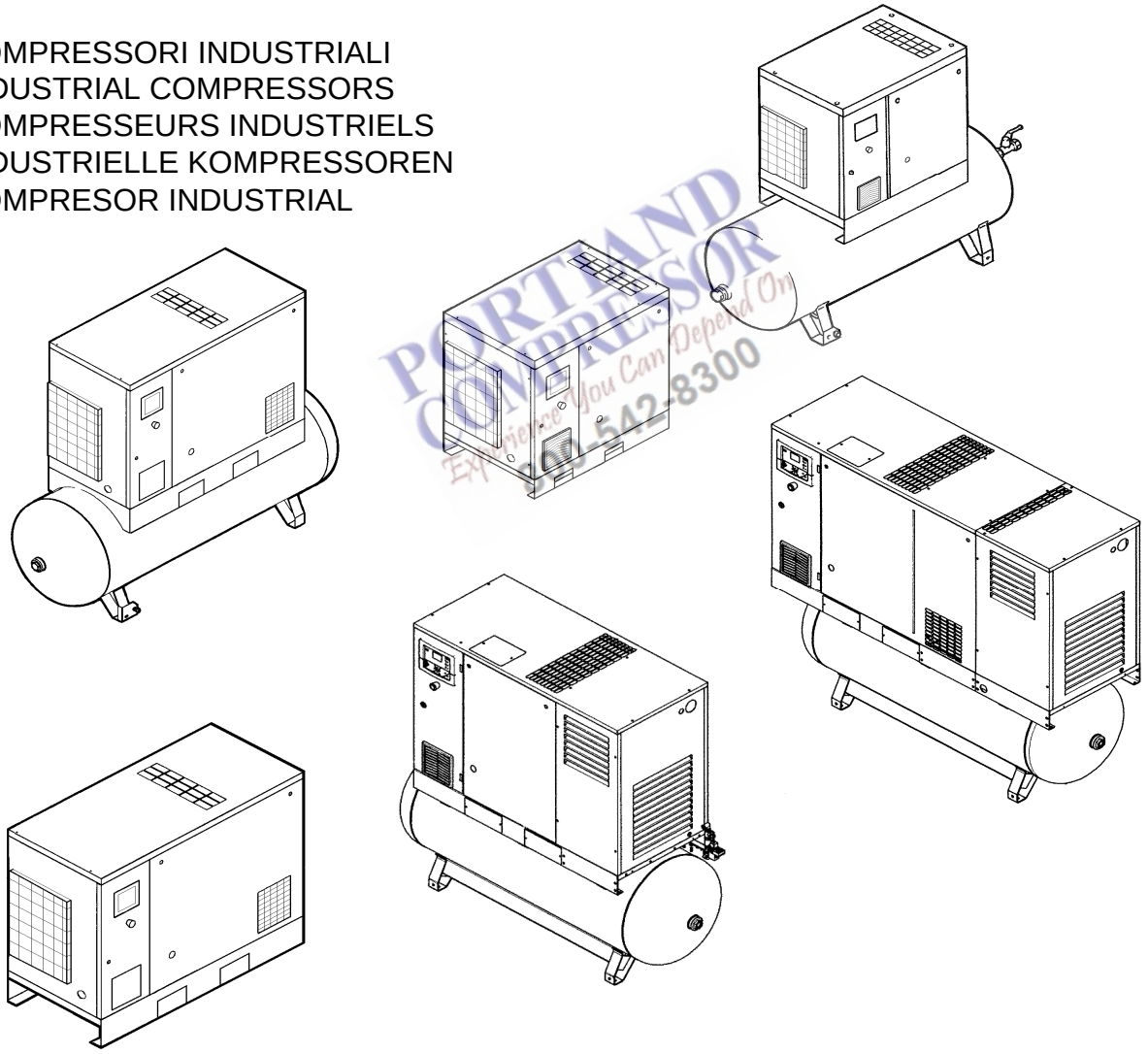

PORTLAND COMPRESSOR
Experience You Can Depend On
800-542-8300

ORIGINAL PART

*CPVSD (C55*DD) - cULus / cCSAus -*
*CPVSD D (C55*DD) - cULus / cCSAus -*

HP 10 - 15 - 20
kW 7,5 - 11 - 15

COMPRESSORI INDUSTRIALI - *INDUSTRIAL COMPRESSORS* - COMPRESSEURS INDUSTRIELS - *INDUSTRIELLE KOMPRESSOREN* - COMPRESOR INDUSTRIAL

CPVSD - CPVSD D				
Codice / Code / Code / Kode / Codigo	HP *kW*	bar *psi*	V Compressore Compressor Compresseur Kompressor Compresor	V Essiccatore Dryer Sécheur Trockner Secador
4152018585	10-7,5	12,5	460/3/50	
4152018588	10-7,5	12,5	460/3/50	115/1/60
4152018597	10-7,5	12,5	460/3/50	
4152018600	10-7,5	12,5	460/3/50	115/1/60
4152018586	15-11	12,5	460/3/50	
4152018589	15-11	12,5	460/3/50	115/1/60
4152018598	15-11	12,5	460/3/50	
4152018601	15-11	12,5	460/3/50	115/1/60
4152018978	15-11	12,5	460/3/50	
4152018587	20-15	12,5	460/3/50	
4152018590	20-15	12,5	460/3/50	115/1/60
4152018599	20-15	12,5	460/3/50	
4152018602	20-15	12,5	460/3/50	115/1/60

CPVSD - CPVSD D ***120 Gal. (ASME / ASME-CNR)***				
Codice / Code / Code / Kode / Codigo	HP *kW*	bar *psi*	V Compressore Compressor Compresseur Kompressor Compresor	V Essiccatore Dryer Sécheur Trockner Secador
4152018591	10-7,5	12,5	460/3/50	
4152018594	10-7,5	12,5	460/3/50	115/1/60
4152018603	10-7,5	12,5	460/3/50	
4152018606	10-7,5	12,5	460/3/50	115/1/60
4152018979	10-7,5	12,5	460/3/50	
4152018982	10-7,5	12,5	460/3/50	115/1/60
4152018592	15-11	12,5	460/3/50	
4152018595	15-11	12,5	460/3/50	115/1/60
4152018604	15-11	12,5	460/3/50	
4152018607	15-11	12,5	460/3/50	115/1/60
4152018980	15-11	12,5	460/3/50	
4152018983	15-11	12,5	460/3/50	115/1/60
4152018593	20-15	12,5	460/3/50	
4152018596	20-15	12,5	460/3/50	115/1/60
4152018605	20-15	12,5	460/3/50	
4152018608	20-15	12,5	460/3/50	115/1/60
4152018981	20-15	12,5	460/3/50	
4152018984	20-15	12,5	460/3/50	115/1/60

PORTLAND COMPRESSOR
Experience You Can Depend On
800-542-8300

N. TAV. DWG. NR. N° TABLE Nr. GRUPPENSATZ N. TAB.	**INDEX**
	DESCRIPTION
1	CASING - SOUND DAMPING PANELS (FM FF VERSION)
2	CASING - SOUND DAMPING PANELS (FM VERSION)
3	CASING - SOUND DAMPING PANELS (TM VERSION)
4	CASING - SOUND DAMPING PANELS (TM FF VERSION)
5	FLOW REGULATOR INTAKE FILTER
6	AIR/OIL TANK - SEPARATOR
7	AIR/OIL COOLER (HP 10-15 / Kw 7,5-11)
8	AIR/OIL COOLER - AIR RECEIVER (HP 10-15 / Kw 7,5-11)
9	AIR/OIL COOLER (HP 20 / Kw 15)
10	AIR/OIL COOLER - AIR RECEIVER (HP 20 / Kw 15)
11	SCREW COMPRESSOR AND ELECTRIC MOTOR - TRANSMISSION
12	PIPE AIR-OIL
13	AUTOMATIC CONDENSARTE DRAIN
14	PIPE AIR DRYER (A4-A4+) FM FF VERSION
15	PIPE AIR DRYER (A6/7 - E6) FM FF VERSION
16	AIR RECEIVER (DRYER A4-A4+)
17	AIR RECEIVER (DRYER A6/7 - E6)
18	AIR RECEIVER 270-500 L. (NO DRYER)
19	AIR DRYER (A4-A4+)
20	AIR DRYER (A6/7)
20A	AIR DRYER (E6)
21	ELECTRIC BOARD CONTROL PANEL
22	LABELS
23	OPTION "WSD" FOR FM VERSION
24	OPTION "WSD" FOR TM VERSION
25	OPTION FILTER FOR FM VERSION (DRYER A4-A4+)
26	OPTION FILTER FOR TM VERSION (DRYER A4-A4+)
27	OPTION FILTER FOR FM VERSION (DRYER A6/7)
27A	OPTION FILTER FOR FM VERSION (DRYER E6)
28	OPTION FILTER FOR TM VERSION (DRYER A5-A6/7)
28A	OPTION FILTER FOR TM VERSION (DRYER E6)
29	OPTION "ZERO LOSS DRAIN FOR WSD"
37	SERVICE KITS

PORTLAND COMPRESSOR
Experience You Can Depend On
800-542-8300

NOTE

PORTLAND COMPRESSOR
Experience You Can Depend On
800-542-8300

TAV. 1

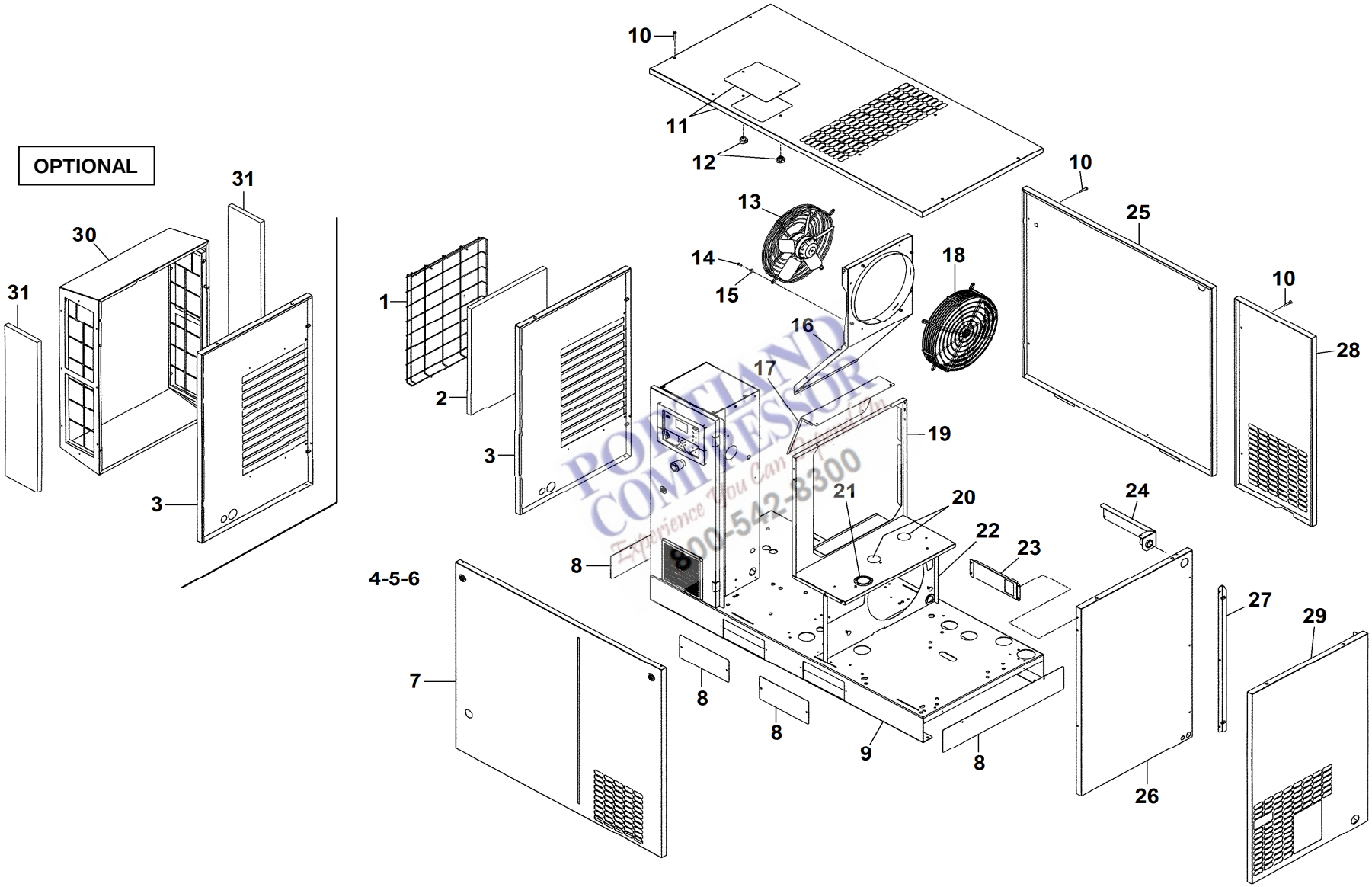

PORTLAND COMPRESSOR
Experience You Can Depend On
800-542-8300

TAV. 1

Casing - Sound-damping panels (FM FF version)

Q.tà - Q.ty - Q.te - Anz. - Cant.

Rif. N. Ref. No Nr. Rèf. Bild Nr. Ref. N.	N. ordinaz. Part. num. Nr. Pièce Teil num. Codigo	HP 10 / Kw 7,5		HP 15 / Kw 11		HP 20 / Kw 15		DESCRIPTION
		4152018588	4152018600	4152018589	4152018601	4152018590	4152018602	
1	2202 2512 09	1	1	1	1	1	1	GRATING
2	2202 2512 10	1	1	1	1	1	1	FILTER
3	2204 1088 16	1	1	1	1	1	1	PANEL LEFT
4	2200 5402 76	2	2	2	2	2	2	DOOR LOCK
5	2202 2512 59	2	2	2	2	2	2	DRAW LATCH
6	2200 5402 64	1	1	1	1	1	1	KEY
7	2204 112287	1	1	1	1	1	1	PANEL FRONT
8	2202 8941 16	1	1	1	1	1	1	PANEL KIT
9	2204 1118 16	1	1	1	1	1	1	FRAME
10	0216 1957 70	19	19	19	19	19	19	SCREW
11	2204 1125 16	1	1	1	1	1	1	PANEL ROOF
12	0362 2000 11	2	2	2	2	2	2	WHEEL
13	2202 9489 01	1	1	1	1	1	1	MOTOR FAN
14	0215 0003 83	4	4	4	4	4	4	SCREW
15	0300 0274 70	4	4	4	4	4	4	WASHER
16	2204 1108 04	1	1	1	1	1	1	MOTOR FAN BRACKET
17	2204 1275 00					1	1	BRACKET COOLER
18	2204 1121 00	1	1	1	1	1	1	PROTECTION GRID
19	2204 1273 04	1	1					PANEL COOLER
19	2204 1272 04			1	1			PANEL COOLER
19	2204 1271 04					1	1	PANEL COOLER
20	0686 9253 36	2	2	2	2	2	2	PROTECTION PLUG
21	1088 0803 08	1	1	1	1	1	1	GROMMET
22	2204 1274 04	1	1	1	1	1	1	PANEL MOTOR
23	2204 1115 00	1	1	1	1	1	1	STIRRUP LOCK
24	2204 1215 00	1	1	1	1	1	1	STIRRUP AIR DELIVERY
25	2204 1239 17	1	1	1	1	1	1	PANEL BACK
26	2204 1089 17	1	1	1	1	1	1	PANEL RIGHT
27	2204 1126 16	1	1	1	1	1	1	PROFILE
28	2204 1124 17	1	1	1	1	1	1	PANEL BACK
29	2204 1123 17	1	1	1	1	1	1	PANEL RIGHT
30	2204 1225 16	1	1	1	1	1	1	PANEL AIR COVER (OPTIONAL)
31	2204 1241 00	2	2	2	2	2	2	FILTER (OPTIONAL)

PORTLAND COMPRESSOR
Experience You Can Depend On
800-542-8300

TAV. 2

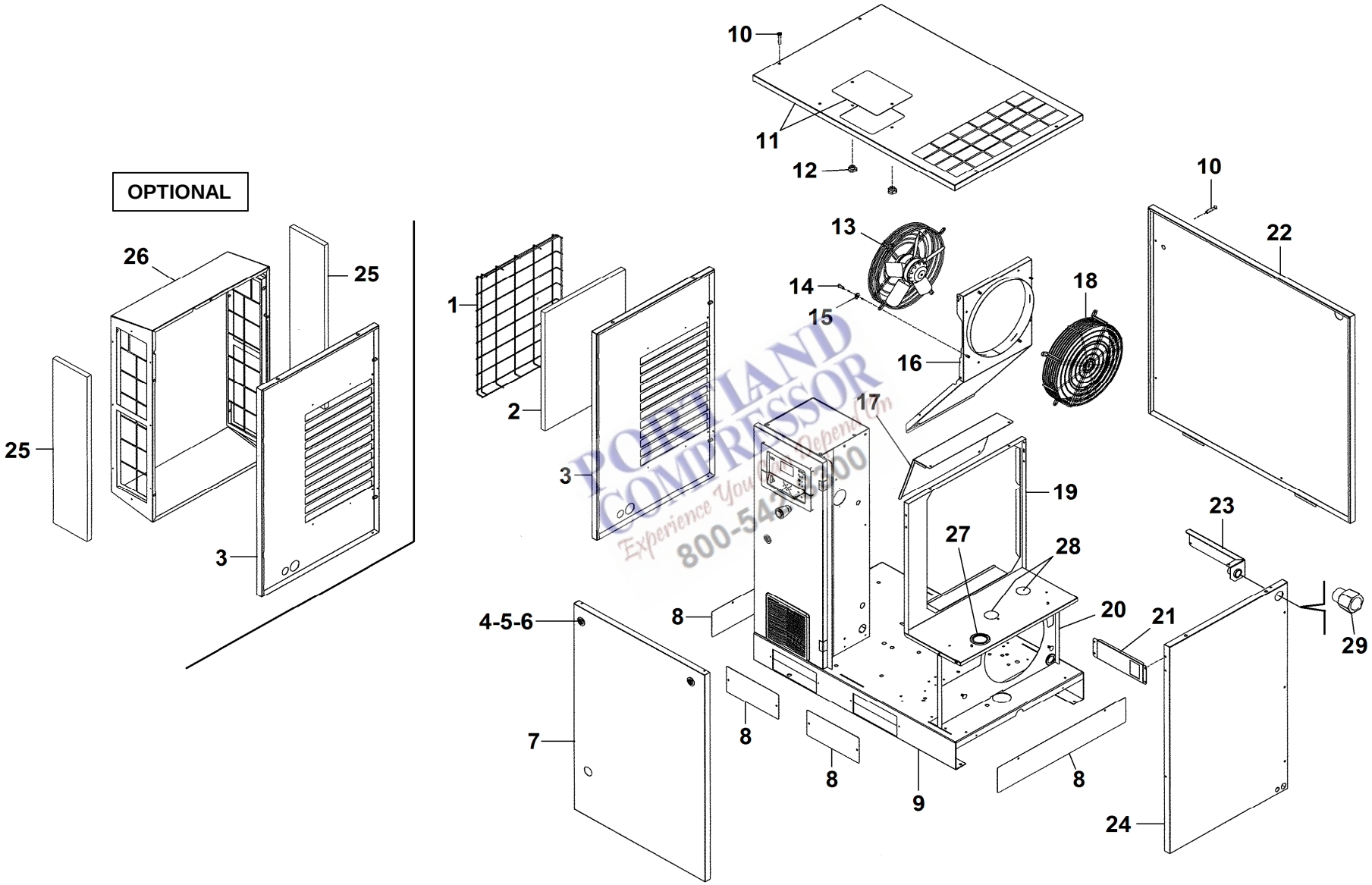

PORTLAND COMPRESSOR
Experience You Can Depend On
800-547-1200

TAV. 2

Casing - Sound-damping panels (FM version)

Q.tà - Q.ty - Q.te - Anz. - Cant.

Rif. N. Ref. No Nr. Rèf. Bild Nr. Ref. N.	N. ordinaz. Part. num. Nr. Pièce Teil num. Codigo	HP 10 / Kw 7,5		HP 15 / Kw 11			HP 20 / Kw 15		DESCRIPTION
		4152018585	4152018597	4152018586	4152018598	4152018978	4152018587	4152018599	
1	2202 2512 09	1	1	1	1	1	1	1	GRATING
2	2202 2512 10	1	1	1	1	1	1	1	FILTER
3	2204 1088 16	1	1	1	1	1	1	1	PANEL LEFT
4	2200 5402 76	2	2	2	2	2	2	2	DOOR LOCK
5	2202 2512 59	2	2	2	2	2	2	2	DRAW LATCH
6	2200 5402 64	1	1	1	1	1	1	1	KEY
7	2204 1116 87	1	1	1	1	1	1	1	PANEL FRONT
8	2202 8941 16	1	1	1	1	1	1	1	PANEL KIT
9	2202 8684 16	1	1	1	1	1	1	1	FRAME
10	0216 1957 70	13	13	13	13	13	13	13	SCREW
11	2204 1090 16	1	1	1	1	1	1	1	PANEL ROOF
12	0362 2000 11	2	2	2	2	2	2	2	WHEEL
13	2202 9489 01	1	1	1	1	1	1	1	MOTOR FAN
14	0215 0003 83	4	4	4	4	4	4	4	SCREW
15	0300 0274 70	4	4	4	4	4	4	4	WASHER
16	2204 1108 04	1	1	1	1	1	1	1	MOTOR FAN BRACKET
17	2204 1275 00						1	1	BRACKET COOLER
18	2204 1121 00	1	1	1	1	1	1	1	PROTECTION GRID
19	2204 1273 04	1	1						PANEL COOLER
19	2204 1272 04			1	1	1			PANEL COOLER
19	2204 1271 04						1	1	PANEL COOLER
20	2204 1274 04	1	1	1	1	1	1	1	PANEL MOTOR
21	2204 1115 00	1	1	1	1	1	1	1	STIRRUP LOCK
22	2204 1239 17	1	1	1	1	1	1	1	PANEL BACK
23	2204 1215 00	1	1	1	1	1	1	1	STIRRUP AIR DELIVERY
24	2204 1089 17	1	1	1	1	1	1	1	PANEL RIGHT
25	2204 1241 00	2	2	2	2	2	2	2	FILTER (OPTIONAL)
26	2204 1225 16	1	1	1	1	1	1	1	PANEL AIR COVER (OPTIONAL)
27	1088 0803 08	1	1	1	1	1	1	1	GROMMET
28	0686 9253 36	2	2	2	2	2	2	2	PROTECTION PLUG
29	0605 8350 44	1	1	1	1	1	1	1	BUSHING

PORTLAND COMPRESSOR
Experience You Can Depend On
800-542-8300

TAV. 3

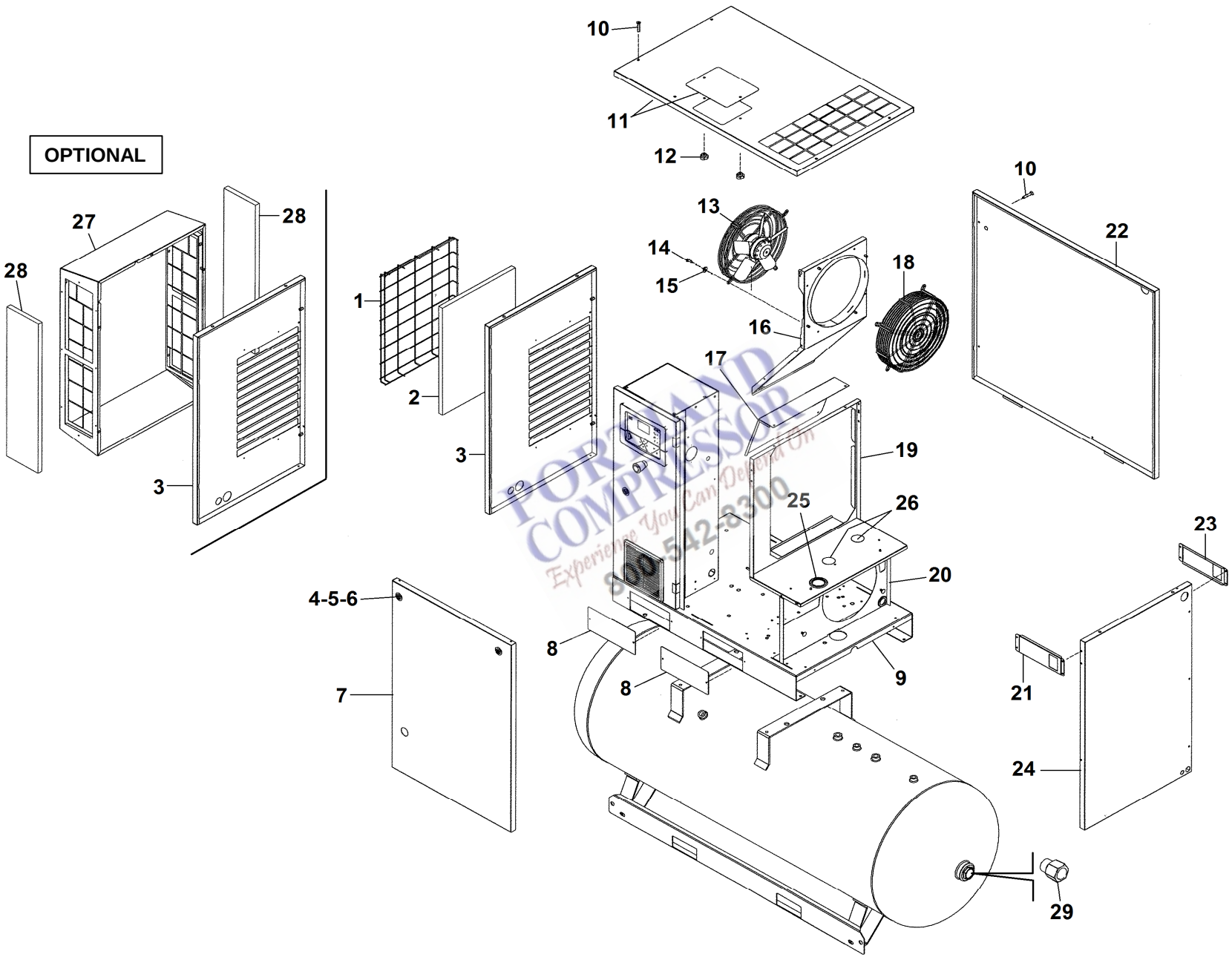

FORCHAND COMPRESSOR
Experience You Can Depend On
800 542-8300

TAV. 3

Casing - Sound-damping panels (TM version)

Q.tà - Q.ty - Q.te - Anz. - Cant.

Rif. N. Ref. No Nr. Rèf. Bild Nr. Ref. N.	N. ordinaz. Part. num. Nr. Pièce Teil num. Codigo	HP 10 / Kw 7,5			HP 15 / Kw 11			HP 20 / Kw 15			DESCRIPTION
		4152018591	4152018603	4152018979	4152018592	4152018604	4152018980	4152018593	4152018605	4152018981	
1	2202 2512 09	1	1	1	1	1	1	1	1	1	GRATING
2	2202 2512 10	1	1	1	1	1	1	1	1	1	FILTER
3	2204 1088 16	1	1	1	1	1	1	1	1	1	PANEL LEFT
4	2200 5402 76	2	2	2	2	2	2	2	2	2	DOOR LOCK
5	2202 2512 59	2	2	2	2	2	2	2	2	2	DRAW LATCH
6	2200 5402 64	1	1	1	1	1	1	1	1	1	KEY
7	2204 1116 87	1	1	1	1	1	1	1	1	1	PANEL FRONT
8	2202 8685 26	1	1	1	1	1	1	1	1	1	PANEL KIT
9	2202 8684 16	1	1	1	1	1	1	1	1	1	FRAME
10	0216 1957 70	13	13	13	13	13	13	13	13	13	SCREW
11	2204 1090 16	1	1	1	1	1	1	1	1	1	PANEL ROOF
12	0362 2000 11	2	2	2	2	2	2	2	2	2	WHEEL
13	2202 9489 01	1	1	1	1	1	1	1	1	1	MOTOR FAN
14	0215 0003 83	4	4	4	4	4	4	4	4	4	SCREW
15	0300 0274 70	4	4	4	4	4	4	4	4	4	WASHER
16	2204 1108 04	1	1	1	1	1	1	1	1	1	MOTOR FAN BRACKET
17	2204 1275 00							1	1	1	BRACKET COOLER
18	2204 1121 00	1	1	1	1	1	1	1	1	1	PROTECTION GRID
19	2204 1273 04	1	1	1							PANEL COOLER
19	2204 1272 04				1	1	1				PANEL COOLER
19	2204 1271 04							1	1	1	PANEL COOLER
20	2204 1274 04	1	1	1	1	1	1	1	1	1	PANEL MOTOR
21	2204 1115 00	1	1	1	1	1	1	1	1	1	STIRRUP LOCK
22	2204 1239 17	1	1	1	1	1	1	1	1	1	PANEL BACK
23	2204 1215 00	1	1	1	1	1	1	1	1	1	STIRRUP AIR DELIVERY
24	2204 1089 17	1	1	1	1	1	1	1	1	1	PANEL RIGHT
25	1088 0803 08	1	1	1	1	1	1	1	1	1	GROMMET
26	0686 9253 36	2	2	2	2	2	2	2	2	2	PROTECTION PLUG
27	2204 1225 16	1	1	1	1	1	1	1	1	1	PANEL AIR COVER (OPTIONAL)
28	2204 1241 00	2	2	2	2	2	2	2	2	2	FILTER (OPTIONAL)
29	0605 8350 44	1	1	1	1	1	1	1	1	1	BUSHING

PORTLAND COMPRESSOR
Experience You Can Depend On
800-542-8300

TAV. 4

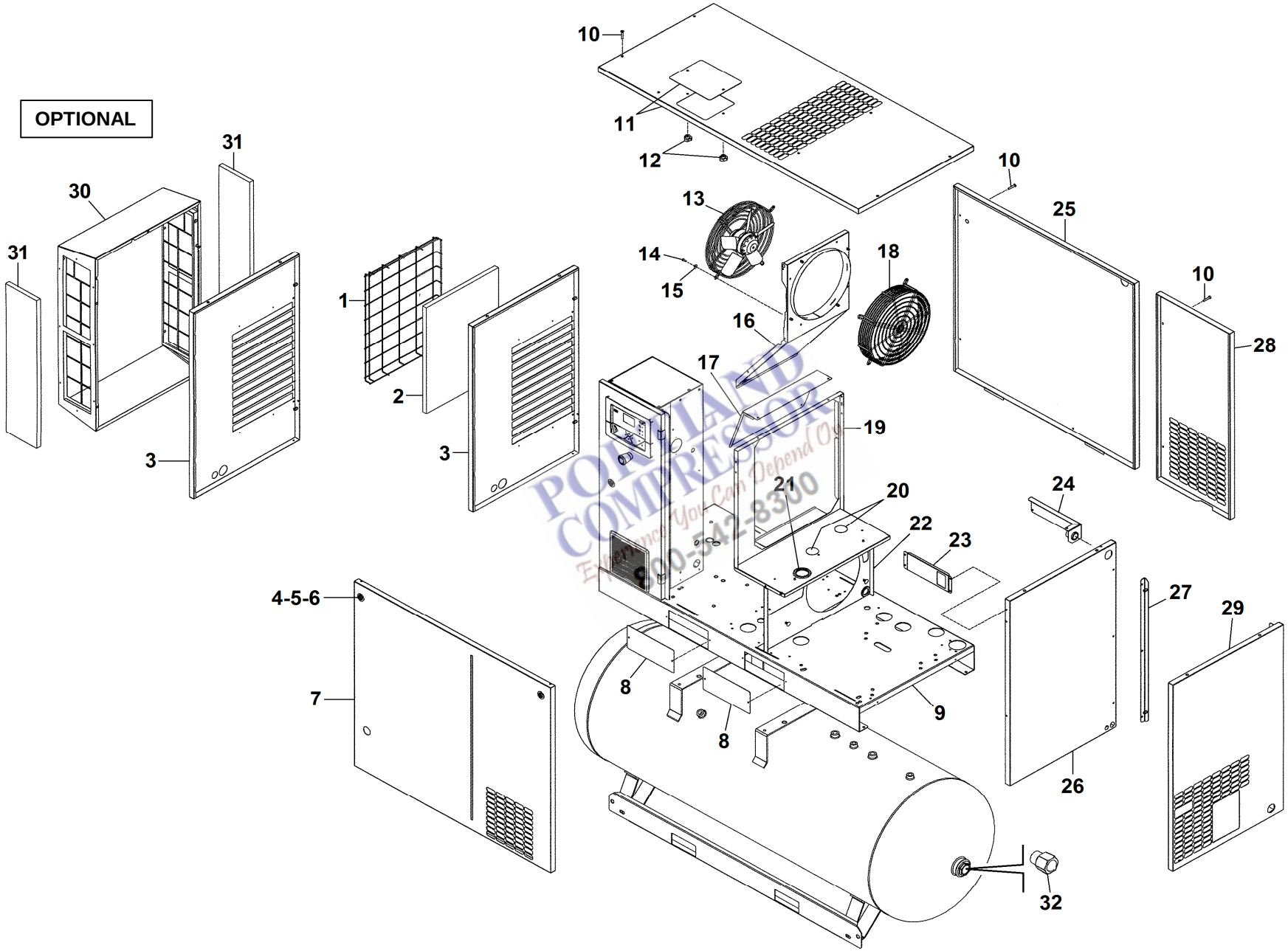

PORTLAND COMPRESSOR
Equipment You Can Depend On
800-542-8300

TAV. 4

Casing - Sound-damping panels (TM FF version)

Q.tà - Q.ty - Q.te - Anz. - Cant.

Rif. N. Ref. No Nr. Rèf. Bild Nr. Ref. N.	N. ordinaz. Part. num. Nr. Pièce Teil num. Codigo	HP 10 / Kw 7,5			HP 15 / Kw 11			HP 20 / Kw 15			DESCRIPTION
		4152018594	4152018606	4152018982	4152018595	4152018607	4152018983	4152018596	4152018608	4152018984	
1	2202 2512 09	1	1	1	1	1	1	1	1	1	GRATING
2	2202 2512 10	1	1	1	1	1	1	1	1	1	FILTER
3	2204 1088 16	1	1	1	1	1	1	1	1	1	PANEL LEFT
4	2200 5402 76	2	2	2	2	2	2	2	2	2	DOOR LOCK
5	2202 2512 59	2	2	2	2	2	2	2	2	2	DRAW LATCH
6	2200 5402 64	1	1	1	1	1	1	1	1	1	KEY
7	2204 1122 87	1	1	1	1	1	1	1	1	1	PANEL FRONT
8	2202 8685 26	1	1	1	1	1	1	1	1	1	PANEL KIT
9	2204 1118 16	1	1	1	1	1	1	1	1	1	FRAME
10	0216 1957 70	19	19	19	19	19	19	19	19	19	SCREW
11	2204 1125 16	1	1	1	1	1	1	1	1	1	PANEL ROOF
12	0362 2000 11	2	2	2	2	2	2	2	2	2	WHEEL
13	2202 9489 01	1	1	1	1	1	1	1	1	1	MOTOR FAN
14	0215 0003 83	4	4	4	4	4	4	4	4	4	SCREW
15	0300 0274 70	4	4	4	4	4	4	4	4	4	WASHER
16	2204 1108 04	1	1	1	1	1	1	1	1	1	MOTOR FAN BRACKET
17	2204 1275 00							1	1	1	BRACKET COOLER
18	2204 1121 00	1	1	1	1	1	1	1	1	1	PROTECTION GRID
19	2204 1273 04	1	1	1							PANEL COOLER
19	2204 1272 04				1	1	1				PANEL COOLER
19	2204 1271 04							1	1	1	PANEL COOLER
20	0686 9253 36	2	2	2	2	2	2	2	2	2	PROTECTION PLUG
21	1088 0803 08	1	1	1	1	1	1	1	1	1	GROMMET
22	2204 1274 04	1	1	1	1	1	1	1	1	1	PANEL MOTOR
23	2204 1115 00	1	1	1	1	1	1	1	1	1	STIRRUP LOCK
24	2204 1215 00	1	1	1	1	1	1	1	1	1	STIRRUP AIR DELIVERY
25	2204 1239 17	1	1	1	1	1	1	1	1	1	PANEL BACK
26	2204 1089 17	1	1	1	1	1	1	1	1	1	PANEL RIGHT
27	2204 1126 16	1	1	1	1	1	1	1	1	1	PROFILE
28	2204 1124 17	1	1	1	1	1	1	1	1	1	PANEL BACK
29	2204 1123 17	1	1	1	1	1	1	1	1	1	PANEL RIGHT
30	2204 1225 16	1	1	1	1	1	1	1	1	1	PANEL AIR COVER (OPTIONAL)
31	2204 1241 00	2	2	2	2	2	2	2	2	2	FILTER (OPTIONAL)
32	0605 8350 44	1	1	1	1	1	1	1	1	1	BUSHING

PORTLAND COMPRESSOR
Experience You Can Depend On
800-542-8300

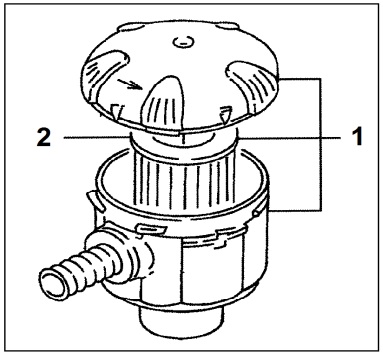

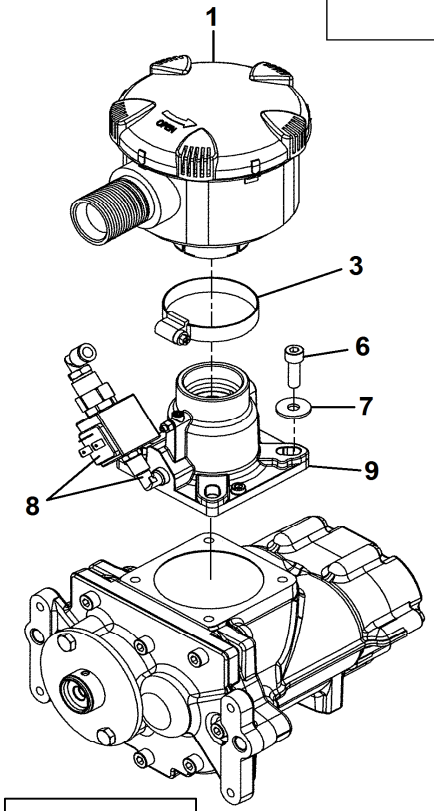

HP10 - kW7,5

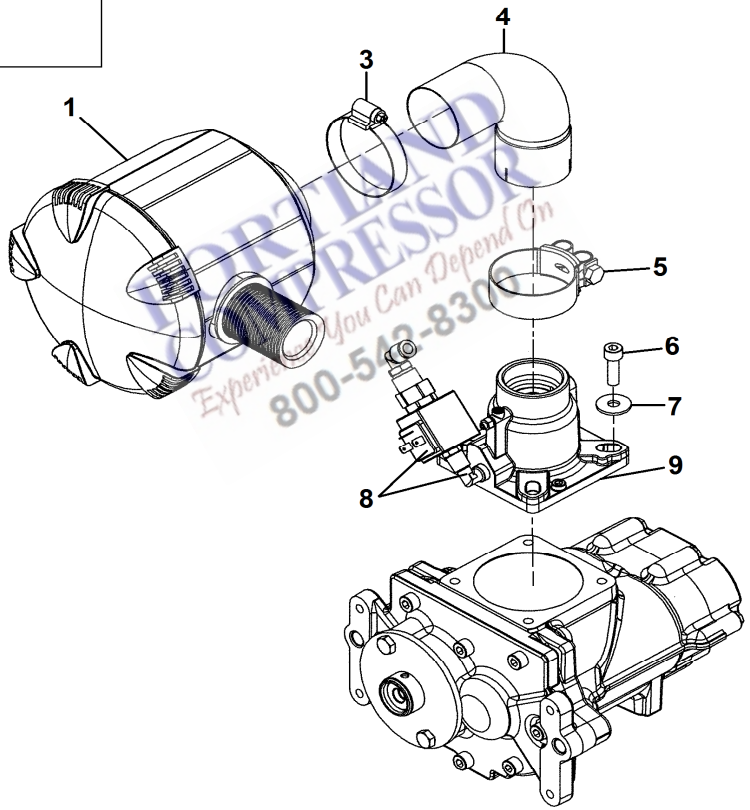

HP15-20 - kW11-15

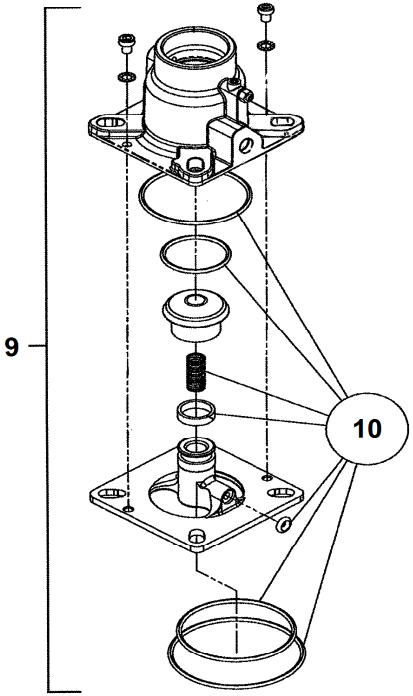

PORTLAND COMPRESSOR
Experience You Can Depend On
800-543-8300

TAV. 5

Flow regulator intake filter

Q.tà - Q.ty - Q.te - Anz. - Cant.

Rif. N. Ref. No Nr. Rèf. Bild Nr. Ref. N.	N. ordinaz. Part. num. Nr. Pièce Teil num. Codigo	HP 10 / Kw 7,5																HP 15 / Kw 11														HP 20 / Kw 15														DESCRIPTION
		4152018588	4152018600	4152018585	4152018597	4152018591	4152018603	4152018594	4152018606	4152018979	4152018982							4152018589	4152018601	4152018586	4152018598	4152018592	4152018604	4152018595	4152018607	4152018978	4152018980	4152018983					4152018590	4152018602	4152018587	4152018599	4152018593	4152018605	4152018596	4152018608	4152018981	4152018984					
1	6211 4738 50	1	1	1	1	1	1	1	1	1	1							1	1	1	1	1	1	1	1	1	1	1																			AIR FILTER ASSEMBLY
1	2202 9256 50																																1	1	1	1	1	1	1	1	1	1					AIR FILTER ASSEMBLY
2	6211 4739 50	1	1	1	1	1	1	1	1	1	1							1	1	1	1	1	1	1	1	1	1	1																			AIR FILTER
2	6211 4723 50																																1	1	1	1	1	1	1	1	1	1					AIR FILTER
3	1079 3471 03	1	1	1	1	1	1	1	1	1	1							1	1	1	1	1	1	1	1	1	1	1					1	1	1	1	1	1	1	1	1	1					HOSE CLAMP
4	2204 1269 16																	1	1	1	1	1	1	1	1	1	1	1					1	1	1	1	1	1	1	1	1	1					SUPPORT
5	1079 3471 03																	1	1	1	1	1	1	1	1	1	1	1					1	1	1	1	1	1	1	1	1	1					HOSE CLIP
6	0211 1325 03	4	4	4	4	4	4	4	4	4	4							4	4	4	4	4	4	4	4	4	4	4					4	4	4	4	4	4	4	4	4	4					SCREW
7	0300 8019 00	4	4	4	4	4	4	4	4	4	4							4	4	4	4	4	4	4	4	4	4	4					4	4	4	4	4	4	4	4	4	4					WASHER
8	2203 0387 00	1	1	1	1	1	1	1	1	1	1							1	1	1	1	1	1	1	1	1	1	1					1	1	1	1	1	1	1	1	1	1					SOLENOID VALVE
9	2203 0161 00	1	1	1	1	1	1	1	1	1	1							1	1	1	1	1	1	1	1	1	1	1					1	1	1	1	1	1	1	1	1	1					UNLOADER VALVE
10	2200 9009 61	1	1	1	1	1	1	1	1	1	1							1	1	1	1	1	1	1	1	1	1	1					1	1	1	1	1	1	1	1	1	1					KIT UNLOADER VALVE

PORTLAND COMPRESSOR
Experience You Can Depend On
800-542-8300

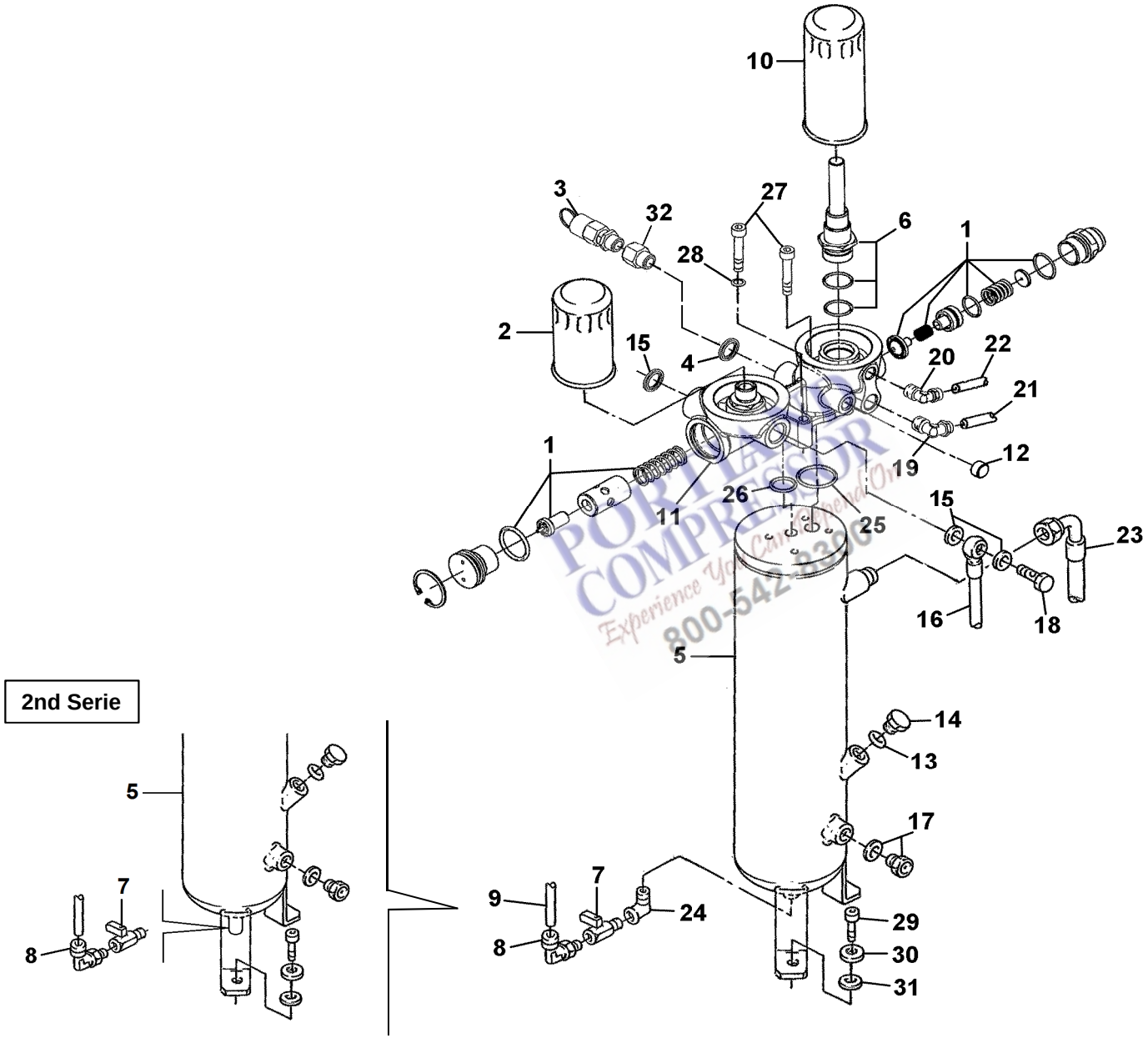

PORTLAND COMPRESSOR
Experience You Can Depend On
800-542-2396

TAV. 6

Air/oil tank-Separator

Q.tà - Q.ty - Q.te - Anz. - Cant.

Rif. N. Ref. No Nr. Rèf. Bild Nr. Ref. N.	N. ordinaz. Part. num. Nr. Pièce Teil num. Codigo	HP 10 / Kw 7,5																HP 15 / Kw 11																HP 20 / Kw 15																DESCRIPTION
		4152018588	4152018600	4152018585	4152018597	4152018591	4152018603	4152018594	4152018606	4152018979	4152018982							4152018589	4152018601	4152018586	4152018598	4152018592	4152018604	4152018595	4152018607	4152018978	4152018980	4152018983						4152018590	4152018602	4152018587	4152018599	4152018593	4152018605	4152018596	4152018608	4152018981	4152018984						
1	2901 1095 00	1	1	1	1	1	1	1	1	1	1							1	1	1	1	1	1	1	1	1	1	1						1	1	1	1	1	1	1	1	1	1							THERMOSTATIC VALV.- MINI. PRES. VAL. KIT
2	6211 4726 50	1	1	1	1	1	1	1	1	1	1							1	1	1	1	1	1	1	1	1	1	1						1	1	1	1	1	1	1	1	1	1							OIL FILTER
3	0830 1009 69	1	1	1	1	1	1	1	1	1	1							1	1	1	1	1	1	1	1	1	1	1						1	1	1	1	1	1	1	1	1	1							SAFETY VALVE
4	0661 1000 40	1	1	1	1	1	1	1	1	1	1							1	1	1	1	1	1	1	1	1	1	1						1	1	1	1	1	1	1	1	1	1							WASHER
5	2202 8642 00		1		1		1		1										1		1		1		1										1		1		1		1										OIL TANK
5	2202 2512 16	1		1		1		1		1	1							1		1		1		1		1	1	1						1		1		1		1		1	1							OIL TANK
6	2200 7517 35	1	1	1	1	1	1	1	1	1	1							1	1	1	1	1	1	1	1	1	1	1						1	1	1	1	1	1	1	1	1	1							KIT NIPPLE-OR
7	0852 0010 45	1	1	1	1	1	1	1	1	1	1							1	1	1	1	1	1	1	1	1	1	1						1	1	1	1	1	1	1	1	1	1							DRAIN COCK
8	0583 8120 22	1	1	1	1	1	1	1	1	1	1							1	1	1	1	1	1	1	1	1	1	1						1	1	1	1	1	1	1	1	1	1							ELBOW UNION
9	0070 6002 15	X	X	X	X	X	X	X	X	X	X							X	X	X	X	X	X	X	X	X	X	X						X	X	X	X	X	X	X	X	X	X							PIPE (IN METERS)
10	6221 3728 50	1	1	1	1	1	1	1	1	1	1							1	1	1	1	1	1	1	1	1	1	1						1	1	1	1	1	1	1	1	1	1							OIL FILTER SEPAR.
11	2202 9992 03	1	1	1	1	1	1	1	1	1	1							1	1	1	1	1	1	1	1	1	1	1						1	1	1	1	1	1	1	1	1	1							VALVES ASS.
12	0686 3718 12	1	1	1	1	1	1	1	1	1	1							1	1	1	1	1	1	1	1	1	1	1						1	1	1	1	1	1	1	1	1	1							PLUG
13	0663 2105 90	1	1	1	1	1	1	1	1	1	1							1	1	1	1	1	1	1	1	1	1	1						1	1	1	1	1	1	1	1	1	1							O-RING
14	2202 2124 21	1	1	1	1	1	1	1	1	1	1							1	1	1	1	1	1	1	1	1	1	1						1	1	1	1	1	1	1	1	1	1							PLUG
15	0661 1000 39	3	3	3	3	3	3	3	3	3	3							3	3	3	3	3	3	3	3	3	3	3						3	3	3	3	3	3	3	3	3	3							WASHER
16	2202 7050 04	1	1	1	1	1	1	1	1	1	1							1	1	1	1	1	1	1	1	1	1	1						1	1	1	1	1	1	1	1	1	1							FLEXIBLE TUBE
17	2200 7599 10	1	1	1	1	1	1	1	1	1	1							1	1	1	1	1	1	1	1	1	1	1						1	1	1	1	1	1	1	1	1	1							OIL GAUGE
18	0627 5100 05	1	1	1	1	1	1	1	1	1	1							1	1	1	1	1	1	1	1	1	1	1						1	1	1	1	1	1	1	1	1	1							SCREW
19	2202 7639 01	1	1	1	1	1	1	1	1	1	1							1	1	1	1	1	1	1	1	1	1	1						1	1	1	1	1	1	1	1	1	1							ELBOW UNION
20	9740 2004 32	1	1	1	1	1	1	1	1	1	1							1	1	1	1	1	1	1	1	1	1	1						1	1	1	1	1	1	1	1	1	1							ELBOW UNION
21	0070 6002 09	X	X	X	X	X	X	X	X	X	X							X	X	X	X	X	X	X	X	X	X	X						X	X	X	X	X	X	X	X	X	X							PIPE (IN METERS)
22	0070 6002 48	X	X	X	X	X	X	X	X	X	X							X	X	X	X	X	X	X	X	X	X	X						X	X	X	X	X	X	X	X	X	X							PIPE (IN METERS)
23	2204 1240 02	1	1	1	1	1	1	1	1	1	1							1	1	1	1	1	1	1	1	1	1	1						1	1	1	1	1	1	1	1	1	1							FLEXIBLE TUBE
24	0560 1303 03	1	1	1	1	1	1	1	1	1	1							1	1	1	1	1	1	1	1	1	1	1						1	1	1	1	1	1	1	1	1	1							ELBOW UNION **(1st Serie)**
25	2204 1321 02	1	1	1	1	1	1	1	1	1	1							1	1	1	1	1	1	1	1	1	1	1						1	1	1	1	1	1	1	1	1	1							O-RING
26	2204 1321 01	1	1	1	1	1	1	1	1	1	1							1	1	1	1	1	1	1	1	1	1	1						1	1	1	1	1	1	1	1	1	1							O-RING
27	0211 1329 03	4	4	4	4	4	4	4	4	4	4							4	4	4	4	4	4	4	4	4	4	4						4	4	4	4	4	4	4	4	4	4							SCREW
28	0333 3100 17	2	2	2	2	2	2	2	2	2	2							2	2	2	2	2	2	2	2	2	2	2						2	2	2	2	2	2	2	2	2	2							WASHER
29	0211 1325 03	2	2	2	2	2	2	2	2	2	2							2	2	2	2	2	2	2	2	2	2	2						2	2	2	2	2	2	2	2	2	2							SCREW
30	0300 8019 00	2	2	2	2	2	2	2	2	2	2							2	2	2	2	2	2	2	2	2	2	2						2	2	2	2	2	2	2	2	2	2							WASHER
31	0333 4232 00	2	2	2	2	2	2	2	2	2	2							2	2	2	2	2	2	2	2	2	2	2						2	2	2	2	2	2	2	2	2	2							WASHER
32	2202 2610 89	1	1	1	1	1	1	1	1	1	1							1	1	1	1	1	1	1	1	1	1	1						1	1	1	1	1	1	1	1	1	1							REDUCTION

PORTLAND COMPRESSOR
Technology You Can Depend On
800-542-8300

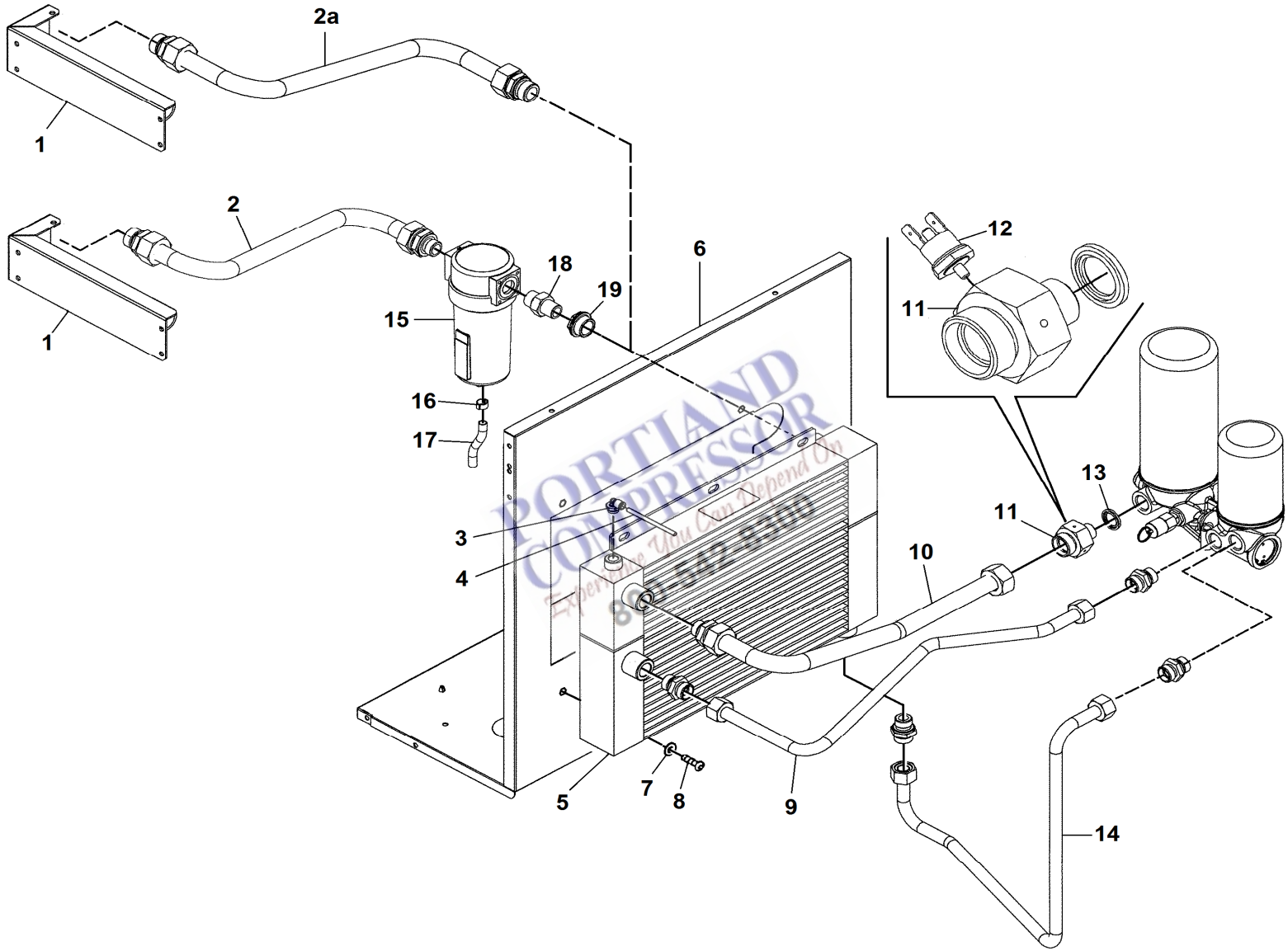

PORTLAND COMPRESSOR
Expertise You Can Depend On
800-582-8500

| TAV. 7 | | Q.tà - Q.ty - Q.te - Anz. - Cant. | | |

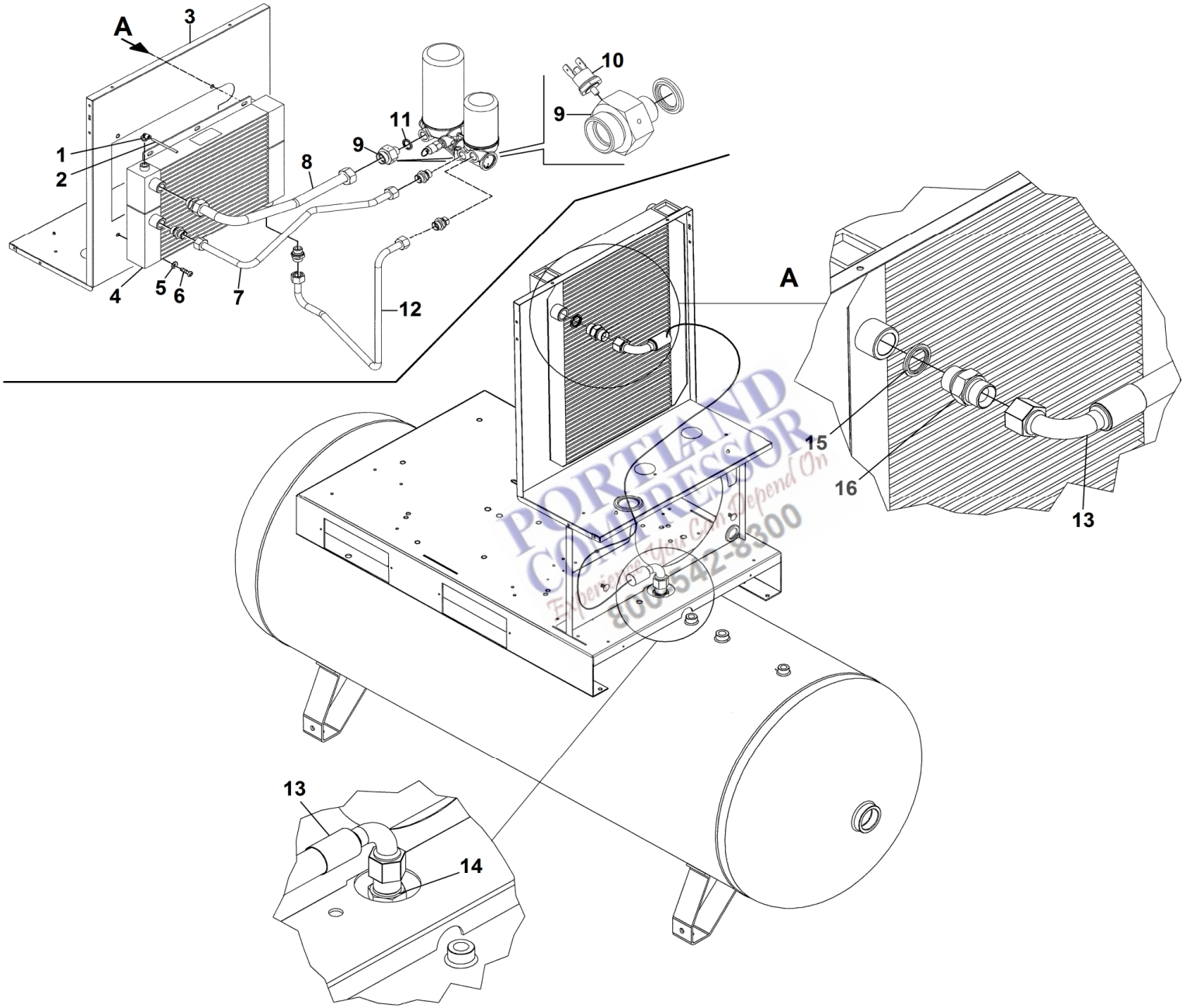

PORTLAND COMPRESSOR
Experience You Can Depend On
800-542-8300

| TAV. 8 | | Q.tà - Q.ty - Q.te - Anz. - Cant. | | |

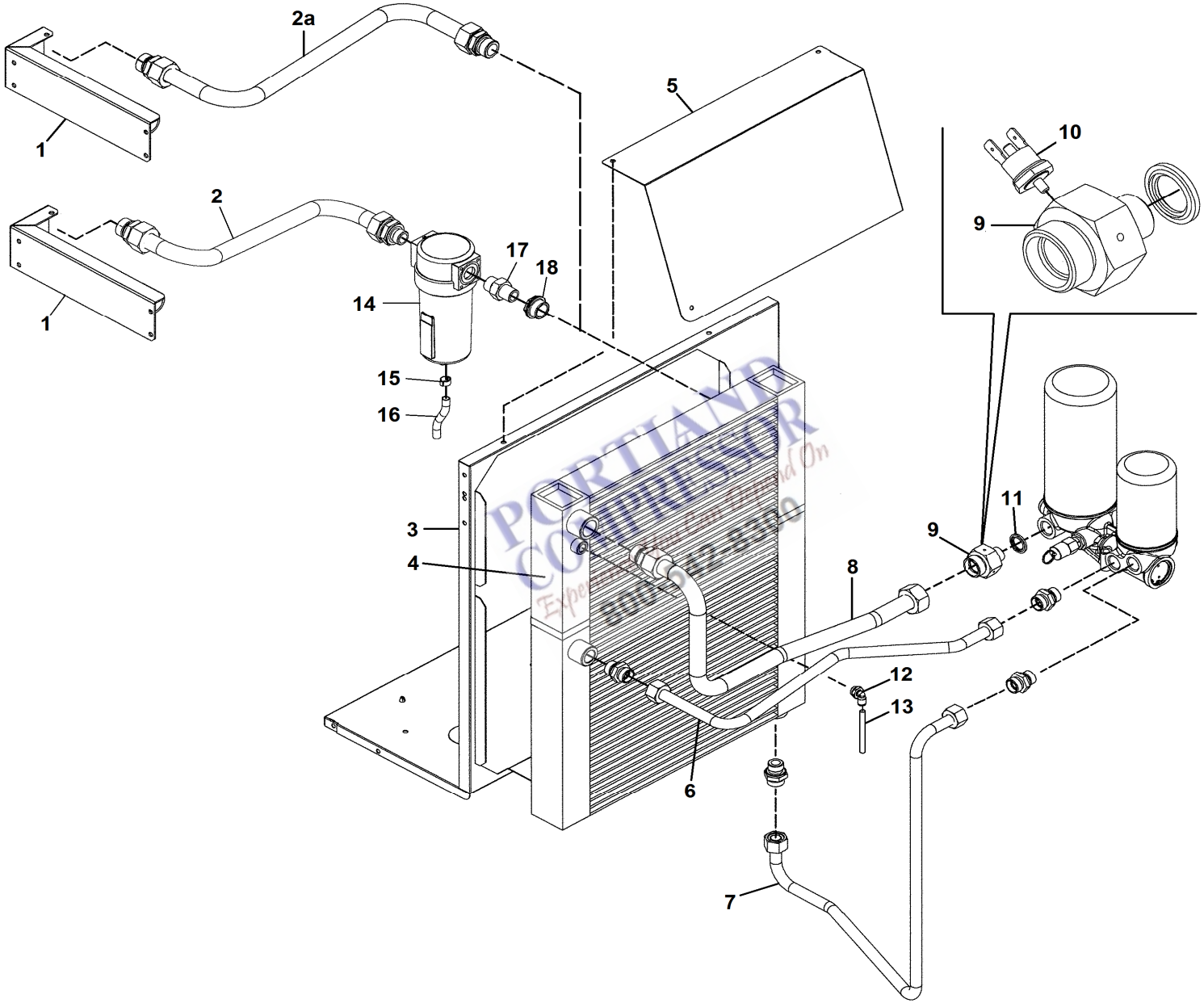
2a
1
2
1
5
10
9
17
18
14
15
16
3
4
9
11
8
12
13
6
7

TAV. 9		Q.tà - Q.ty - Q.te - Anz. - Cant.																											Air/oil cooler
		HP 20 / Kw 15																											
Rif. N. Ref. No Nr. Rèf. Bild Nr. Ref. N.	N. ordinaz. Part. num. Nr. Pièce Teil num. Codigo	4152018587	4152018599	4152018593	4152018605	4152018590	4152018596	4152018602	4152018608	4152018981	4152018984																		DESCRIPTION
1	2204 1215 00	1	1	1	1	1	1	1	1	1	1																		STIRRUP AIR DELIVERY
2	2204 1313 01					1	1	1	1		1																		PIPE AIR DELIVERY
2a	2204 1137 01	1	1																										PIPE AIR DELIVERY
3	2204 1271 04	1	1	1	1	1	1	1	1	1	1																		PANEL COOLER
4	2202 8974 00	1	1	1	1	1	1	1	1	1	1																		COOLER
5	2204 1275 00	1	1	1	1	1	1	1	1	1	1																		BRACKET COOLER
6	2204 1133 00	1	1	1	1	1	1	1	1	1	1																		PIPE OIL COOLER
7	2204 1135 00	1	1	1	1	1	1	1	1	1	1																		PIPE OIL COOLER
8	2204 1130 00	1	1	1	1	1	1	1	1	1	1																		PIPE AIR OUTLET
9	2204 1140 00	1	1	1	1	1	1	1	1	1	1																		COUPLING
10	2204 1209 01	1	1	1	1	1	1	1	1	1	1																		TEMPERATURE SWITCH
11	0661 1000 39	1	1	1	1	1	1	1	1	1	1																		WASHER
12	9090 1519 00	1	1	1	1	1	1	1	1	1	1																		COUPLING
13	0070 7250 04	X	X	X	X	X	X	X	X	X	X																		PIPE (IN METERS)
14	6221 3535 00					1	1	1	1		1																		WATER SEPARATOR
15	0347 0104 00					1	1	1	1		1																		CLAMP HOSE
16	0070 6002 26					X	X	X	X		X																		PIPE (IN METERS)
17	1503 1225 00					1	1	1	1		1																		NIPPLE
18	2202 8858 00					1	1	1	1		1																		REDUCTION

PORTLAND COMPRESSOR
Experience You Can Depend On
800-542-8300

TAV. 10

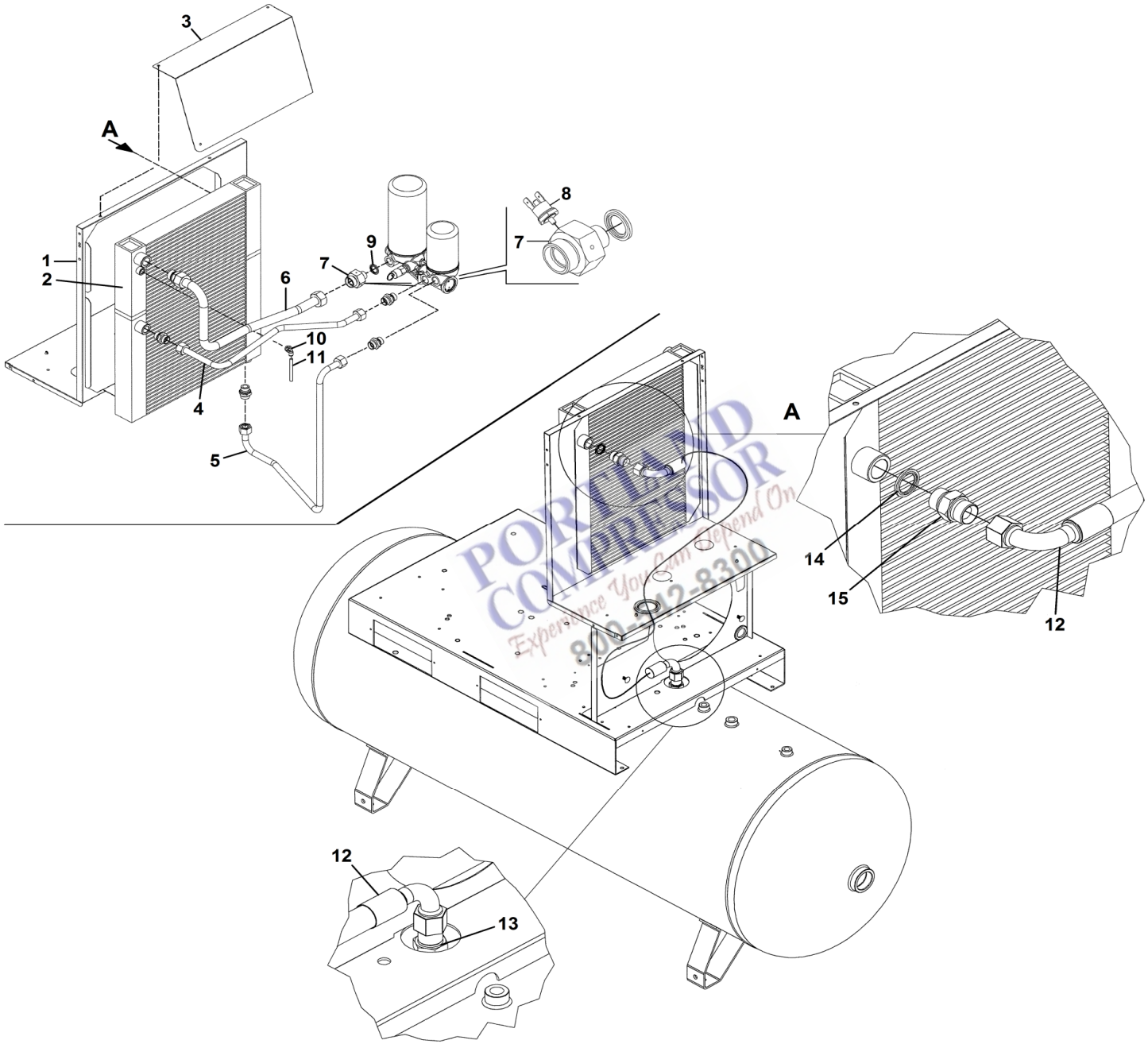

PORTLAND COMPRESSOR
Experience You can Depend On
800-752-8300

TAV. 10		Q.tà - Q.ty - Q.te - Anz. - Cant.																													Air/oil cooler
		HP 20 / Kw 15																													
Rif. N. Ref. No Nr. Rèf. Bild Nr. Ref. N.	N. ordinaz. Part. num. Nr. Pièce Teil num. Codigo	4152018593	4152018605	4152018981																											DESCRIPTION
1	2204 1271 04	1	1	1																											PANEL COOLER
2	2202 8974 00	1	1	1																											COOLER
3	2204 1275 00	1	1	1																											BRACKET COOLER
4	2204 1133 00	1	1	1																											PIPE OIL COOLER
5	2204 1135 00	1	1	1																											PIPE OIL COOLER
6	2204 1130 00	1	1	1																											PIPE AIR OUTLET
7	2204 1140 00	1	1	1																											COUPLING
8	2204 1209 01	1	1	1																											TEMPERATURE SWITCH
9	0661 1000 39	1	1	1																											WASHER
10	9090 1519 00	1	1	1																											COUPLING
11	0070 7250 04	1	1	1																											PIPE (IN METERS)
12	2202 8681 19	1	1	1																											FLEXIBLE TUBE
13	0606 0000 36	1	1	1																											NIPPLE
14	0661 1000 43	1	1	1																											WASHER
15	0603 4243 02	1	1	1																											NIPPLE

PORTLAND COMPRESSOR
Experience You Can Depend On
800-542-8300

TAV. 11

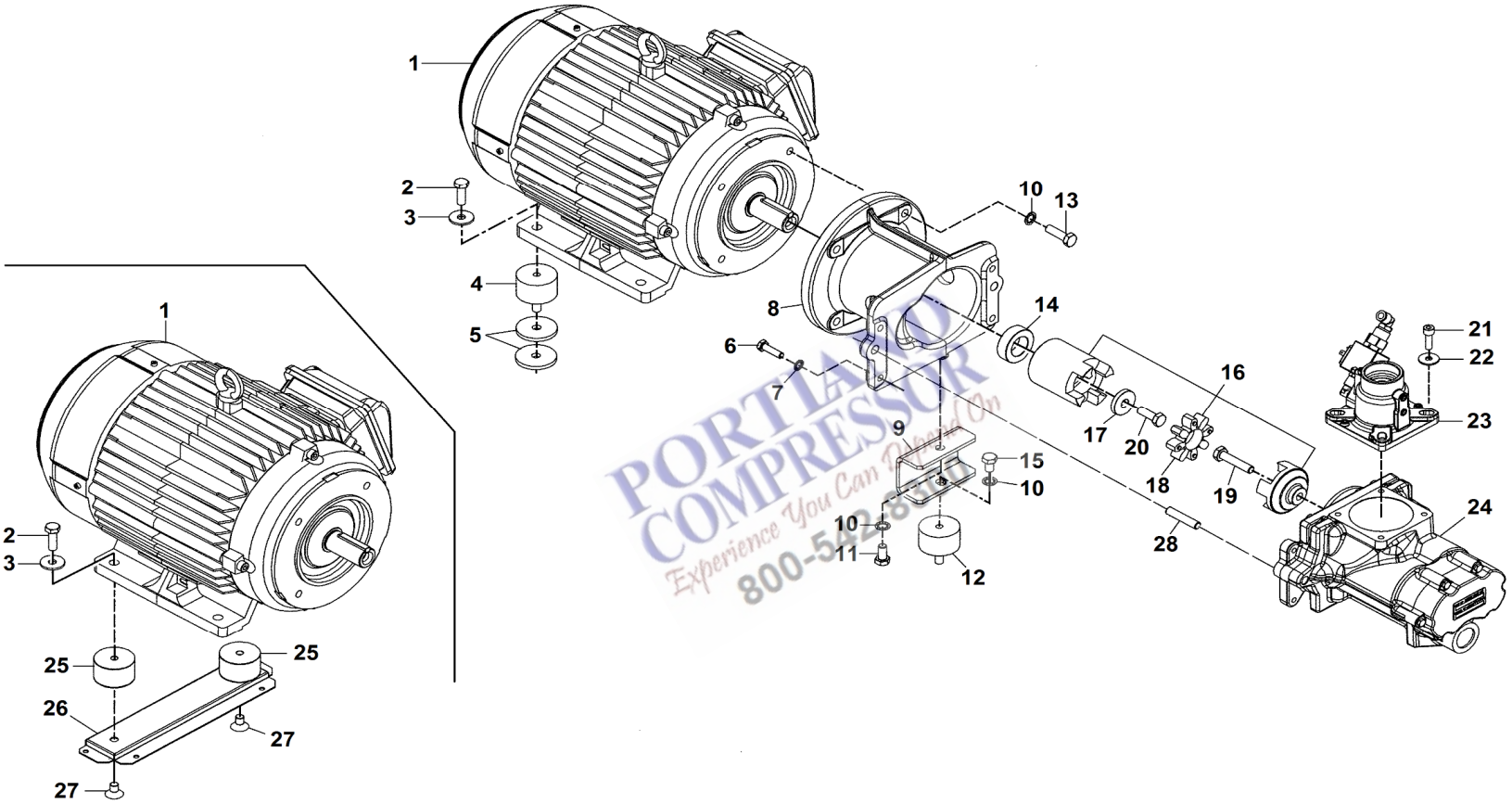

PORTLAND COMPRESSOR
Experience You Can Depend On
800-542-8506

TAV. 11

Screw compressor and electric motor -Transmission

Q.tà - Q.ty - Q.te - Anz. - Cant.

Rif. N. Ref. No Nr. Rèf. Bild Nr. Ref. N.	N. ordinaz. Part. num. Nr. Pièce Teil num. Codigo	Nota-Note-Note-Anm.-Nota	HP 10 / Kw 7,5														HP 15 / Kw 11														HP 20 / Kw 15														DESCRIPTION
			4152018585	4152018591	4152018597	4152018603	4152018588	4152018594	4152018600	4152018606	4152018979	4152018982					4152018586	4152018592	4152018598	4152018604	4152018589	4152018595	4152018601	4152018607	4152018978	4152018980	4152018983					4152018587	4152018593	4152018599	4152018605	4152018590	4152018596	4152018602	4152018608	4152018981	4152018984				
1	2204 1086 00		1	1	1	1	1	1	1	1	1	1																																	ELECTRIC MOTOR
1	2204 1085 00																1	1	1	1	1	1	1	1	1	1	1																		ELECTRIC MOTOR
1	2204 1084 00																														1	1	1	1	1	1	1	1	1	1					ELECTRIC MOTOR
2	0147 1362 03		2	2	2	2	2	2	2	2	2	2					2	2	2	2	2	2	2	2	2	2	2					2	2	2	2	2	2	2	2	2	2					SCREW
3	0300 0274 17		2	2	2	2	2	2	2	2	2	2					2	2	2	2	2	2	2	2	2	2	2					2	2	2	2	2	2	2	2	2	2					WASHER
4	0392 1100 23		2	2	2	2					2						2	2	2	2					2	2						2	2	2	2					2						DAMPER
5	1513 0036 03		4	4	4	4					4						4	4	4	4					4	4						4	4	4	4					4						WASHER
6	0147 1326 03		4	4	4	4	4	4	4	4	4	4					4	4	4	4	4	4	4	4	4	4	4					4	4	4	4	4	4	4	4	4	4					SCREW
7	0333 3100 17		4	4	4	4	4	4	4	4	4	4					4	4	4	4	4	4	4	4	4	4	4					4	4	4	4	4	4	4	4	4	4					LOCK WASHER
8	2204 1035 00		1	1	1	1	1	1	1	1	1	1					1	1	1	1	1	1	1	1	1	1	1					1	1	1	1	1	1	1	1	1	1					HOUSING
9	2204 1112 00		1	1	1	1	1	1	1	1	1	1					1	1	1	1	1	1	1	1	1	1	1					1	1	1	1	1	1	1	1	1	1					STIRRUP
10	0333 4232 00		6	6	6	6	6	6	6	6	6	6					6	6	6	6	6	6	6	6	6	6	6					6	6	6	6	6	6	6	6	6	6					LOCK WASHER
11	0147 1360 03		1	1	1	1	1	1	1	1	1	1					1	1	1	1	1	1	1	1	1	1	1					1	1	1	1	1	1	1	1	1	1					SCREW
12	0392 1100 23		1	1	1	1	1	1	1	1	1	1					1	1	1	1	1	1	1	1	1	1	1					1	1	1	1	1	1	1	1	1	1					DAMPER
13	0147 1364 03		4	4	4	4	4	4	4	4	4	4					4	4	4	4	4	4	4	4	4	4	4					4	4	4	4	4	4	4	4	4	4					SCREW
14	2204 1270 02		1	1	1	1	1	1	1	1	1	1																																	SPACER
14	2204 1270 01																1	1	1	1	1	1	1	1	1	1	1					1	1	1	1	1	1	1	1	1	1					SPACER
15	0147 1359 03		1	1	1	1	1	1	1	1	1	1					1	1	1	1	1	1	1	1	1	1	1					1	1	1	1	1	1	1	1	1	1					SCREW
16	2204 1024 00		1	1	1	1	1	1	1	1	1	1																																	JOINT
16	2204 1034 00																1	1	1	1	1	1	1	1	1	1	1					1	1	1	1	1	1	1	1	1	1					JOINT
17	2204 1025 01																1	1	1	1	1	1	1	1	1	1	1					1	1	1	1	1	1	1	1	1	1					WASHER
18	2204 1034 50		1	1	1	1	1	1	1	1	1	1					1	1	1	1	1	1	1	1	1	1	1					1	1	1	1	1	1	1	1	1	1					SPIDER
19	2202 2500 96		1	1	1	1	1	1	1	1	1	1					1	1	1	1	1	1	1	1	1	1	1					1	1	1	1	1	1	1	1	1	1					SCREW
20	0147 1363 03																1	1	1	1	1	1	1	1	1	1	1					1	1	1	1	1	1	1	1	1	1					SCREW
21	0211 1325 03		4	4	4	4	4	4	4	4	4	4					4	4	4	4	4	4	4	4	4	4	4					4	4	4	4	4	4	4	4	4	4					SCREW
22	0300 8019 00		4	4	4	4	4	4	4	4	4	4					4	4	4	4	4	4	4	4	4	4	4					4	4	4	4	4	4	4	4	4	4					WASHER
23	2203 0161 00		1	1	1	1	1	1	1	1	1	1					1	1	1	1	1	1	1	1	1	1	1					1	1	1	1	1	1	1	1	1	1					INTAKE VALVE
24	1616 7535 90		1	1	1	1	1	1	1	1	1	1					1	1	1	1	1	1	1	1	1	1	1					1	1	1	1	1	1	1	1	1	1					ELEMENT
25	0392 1100 77						2	2	2	2		2									2	2	2	2			2									2	2	2	2		2					DAMPER
26	2204 1109 00						1	1	1	1		1									1	1	1	1			1									1	1	1	1		1					STIRRUP DRY VERSION
27	0216 1100 38						2	2	2	2		2									2	2	2	2			2									2	2	2	2		2					SCREW
28	0101 2311 50		2	2	2	2	2	2	2	2	2	2					2	2	2	2	2	2	2	2	2	2	2					2	2	2	2	2	2	2	2	2	2					PARALLEL PIN

PORTLAND COMPRESSOR
Equipment You Can Depend On
800-542-8300

TAV. 12

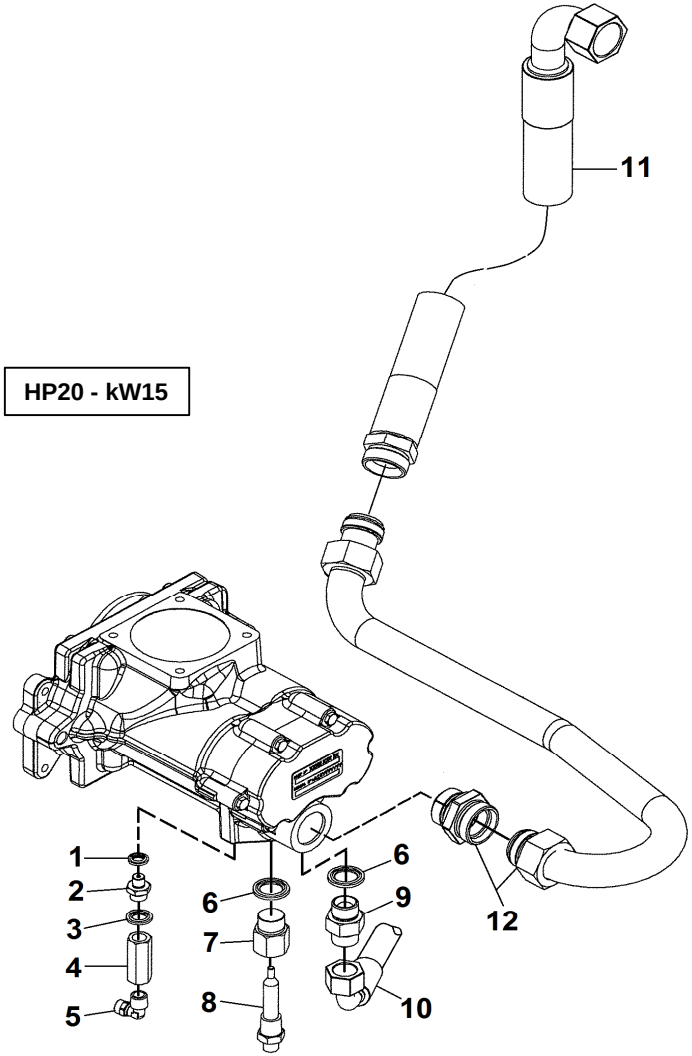

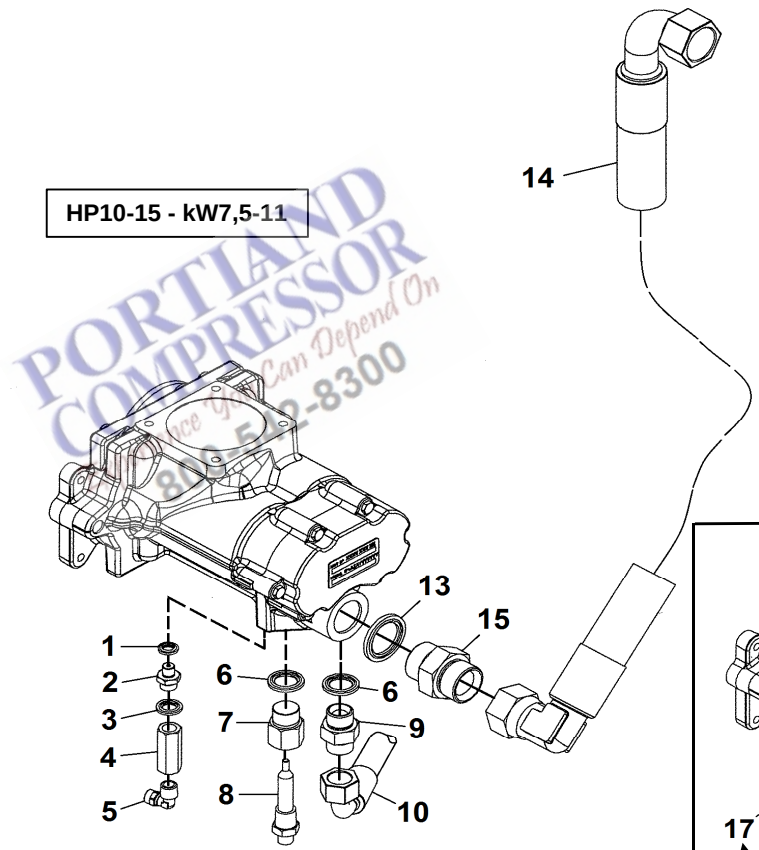

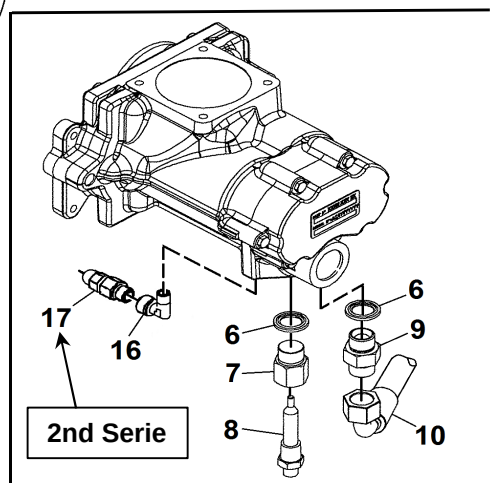

PORTLAND COMPRESSOR
Service You Can Depend On
800-542-8300

TAV. 12

Pipe air-oil

Q.tà - Q.ty - Q.te - Anz. - Cant.

Rif. N. Ref. No Nr. Rèf. Bild Nr. Ref. N.	N. ordinaz. Part. num. Nr. Pièce Teil num. Codigo	Nota-Note-Note-Anm.-Nota	HP 10 / Kw 7,5															HP 15 / Kw 11														HP 20 / Kw 15														DESCRIPTION
			4152018585	4152018591	4152018597	4152018603	4152018588	4152018594	4152018600	4152018606	4152018979	4152018982						4152018586	4152018592	4152018598	4152018604	4152018589	4152018595	4152018601	4152018607	4152018978	4152018980	4152018983					4152018587	4152018590	4152018593	4152018596	4152018599	4152018602	4152018605	4152018608	4152018981	4152018984			
1	0661 1000 42		1	1	1	1	1	1	1	1	1	1						1	1	1	1	1	1	1	1	1	1	1					1	1	1	1	1	1	1	1	1	1				SEAL WASHER
2	2202 9351 01		1	1	1	1	1	1	1	1	1	1						1	1	1	1	1	1	1	1	1	1	1					1	1	1	1	1	1	1	1	1	1				NOZZLE
3	0661 1000 38		1	1	1	1	1	1	1	1	1	1						1	1	1	1	1	1	1	1	1	1	1					1	1	1	1	1	1	1	1	1	1				SEAL WASHER
4	0823 0050 39		1	1	1	1	1	1	1	1	1	1						1	1	1	1	1	1	1	1	1	1	1					1	1	1	1	1	1	1	1	1	1				VALVE NON RETURN
5	9740 2004 32		1	1	1	1	1	1	1	1	1	1						1	1	1	1	1	1	1	1	1	1	1					1	1	1	1	1	1	1	1	1	1				ELBOW COUPLING
6	0661 1000 39		2	2	2	2	2	2	2	2	2	2						2	2	2	2	2	2	2	2	2	2	2					2	2	2	2	2	2	2	2	2	2				SEAL WASHER
7	6231 9087 00		1	1	1	1	1	1	1	1	1	1						1	1	1	1	1	1	1	1	1	1	1					1	1	1	1	1	1	1	1	1	1				RACCORD
8	1089 0574 15		1	1	1	1	1	1	1	1	1	1						1	1	1	1	1	1	1	1	1	1	1					1	1	1	1	1	1	1	1	1	1				SENSOR TEMPERATURE
9	0571 0035 76		1	1	1	1	1	1	1	1	1	1						1	1	1	1	1	1	1	1	1	1	1					1	1	1	1	1	1	1	1	1	1				NIPPLE
10	2202 7050 04		1	1	1	1	1	1	1	1	1	1						1	1	1	1	1	1	1	1	1	1	1					1	1	1	1	1	1	1	1	1	1				FLEXIBLE TUBE
11	2204 1240 01																																1	1	1	1	1	1	1	1	1	1				FLEXIBLE TUBE AIR-OIL
12	2204 1136 00																																1	1	1	1	1	1	1	1	1	1				PIPE AIR-OIL
13	0661 1000 44		1	1	1	1	1	1	1	1	1	1						1	1	1	1	1	1	1	1	1	1	1																		SEAL WASHER
14	2204 1240 02		1	1	1	1	1	1	1	1	1	1						1	1	1	1	1	1	1	1	1	1	1																		FLEXIBLE TUBE AIR-OIL
15	0571 0035 77		1	1	1	1	1	1	1	1	1	1						1	1	1	1	1	1	1	1	1	1	1																		NIPPLE
16	1503 2565 01		1	1	1	1	1	1	1	1	1	1						1	1	1	1	1	1	1	1	1	1	1					1	1	1	1	1	1	1	1	1	1				ELBOW COUPLING **(2nd Serie)**
17	2204 1546 01		1	1	1	1	1	1	1	1	1	1						1	1	1	1	1	1	1	1	1	1	1					1	1	1	1	1	1	1	1	1	1				CHECK VALVE **(2nd Serie)**

PORTLAND COMPRESSOR
Experience You Can Depend On
800-542-8300

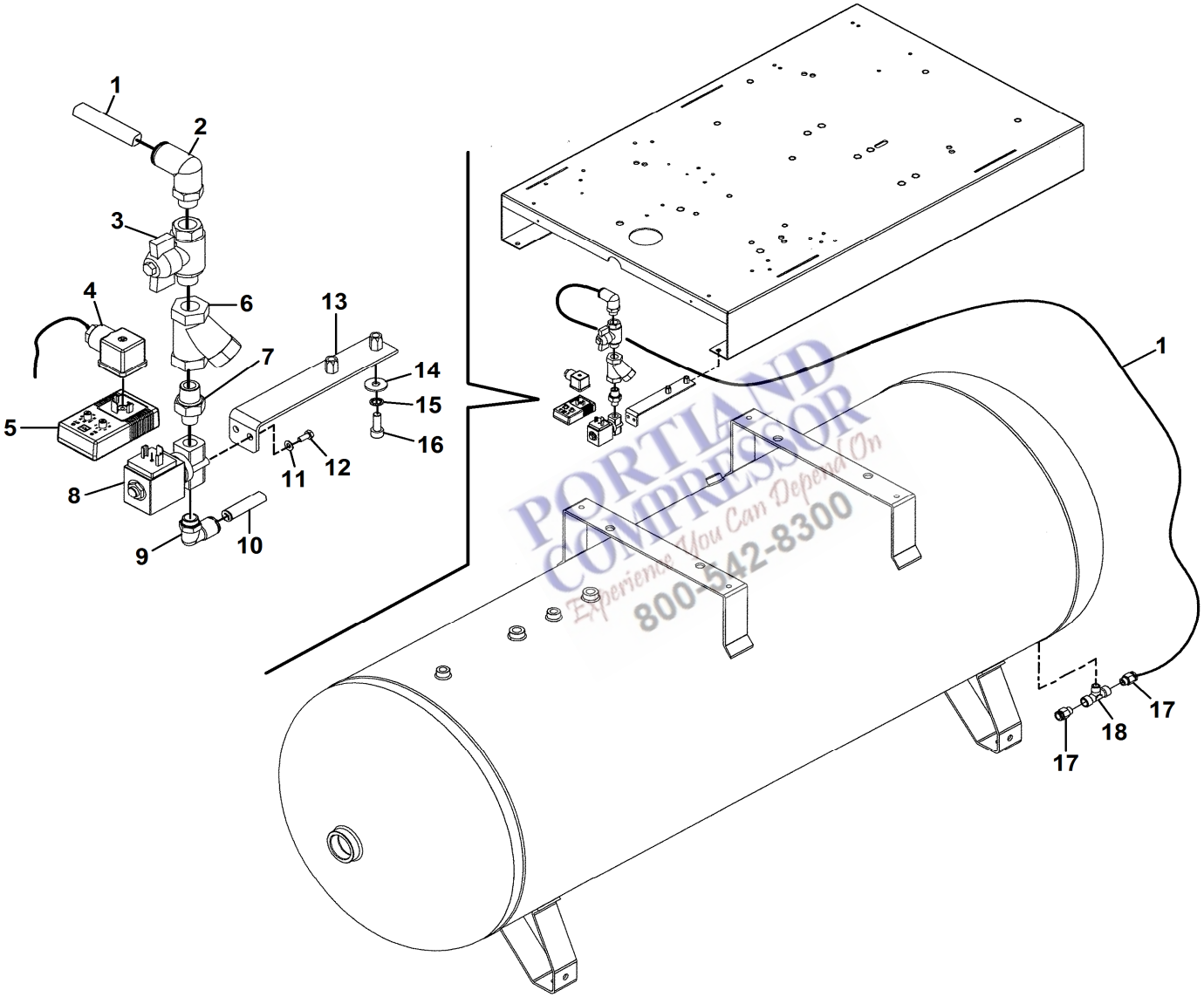

PORTLAND COMPRESSOR
Experience You Can Depend On
800-542-8300

TAV. 13

Automatic condensate drain

Rif. N. / Ref. No / Nr. Réf. / Bild Nr. / Ref. N.	N. ordinaz. / Part. num. / Nr. Pièce / Teil num. / Codigo	Q.tà - Q.ty - Q.te - Anz. - Cant. HP 10 / kW 7,5			HP 15 / kW 11			HP 20 / kW 15			DESCRIPTION
		4152018591	4152018603	4152018979	4152018592	4152018604	4152018980	4152018593	4152018605	4152018981	
1	0070 6002 64	X	X	X	X	X	X	X	X	X	PIPE (IN METERS)
2	0583 8120 923	1	1	1	1	1	1	1	1	1	ELBOW
3	0852 0010 09	1	1	1	1	1	1	1	1	1	VALVE
4	2205 0308 01	1	1	1	1	1	1	1	1	1	WIRE TIMER DRAIN
5	2202 0121 82	1	1	1	1	1	1	1	1	1	TIMER DRAIN
6	0803 5010 09	1	1	1	1	1	1	1	1	1	STRAINER
7	0603 5103 03	1	1	1	1	1	1	1	1	1	NIPPLE
8	2200 5996 21	1	1	1	1	1	1	1	1	1	SOLENOID VALVE
9	0583 8120 22	1	1	1	1	1	1	1	1	1	ELBOW
10	0070 6002 26	X	X	X	X	X	X	X	X	X	PIPE (IN METERS)
11	0301 2315 00	2	2	2	2	2	2	2	2	2	WASHER
12	0147 1170 03	2	2	2	2	2	2	2	2	2	SCREW
13	2202 2513 57	1	1	1	1	1	1	1	1	1	SUPPORT
14	0300 0274 64	2	2	2	2	2		2	2	2	WASHER
15	0333 4220 00	2	2	2	2	2	2	2	2	2	LOCK WASHER
16	0211 1246 03	2	2	2	2	2	2	2	2	2	SCREW
17	0583 8100 89	2	2	2	2	2	2	2	2	2	COUPLING
18	9740 2027 33	1	1	1	1	1	1	1	1	1	TEE

PORTLAND COMPRESSOR
Experience You Can Depend On
800-542-8300

TAV. 14

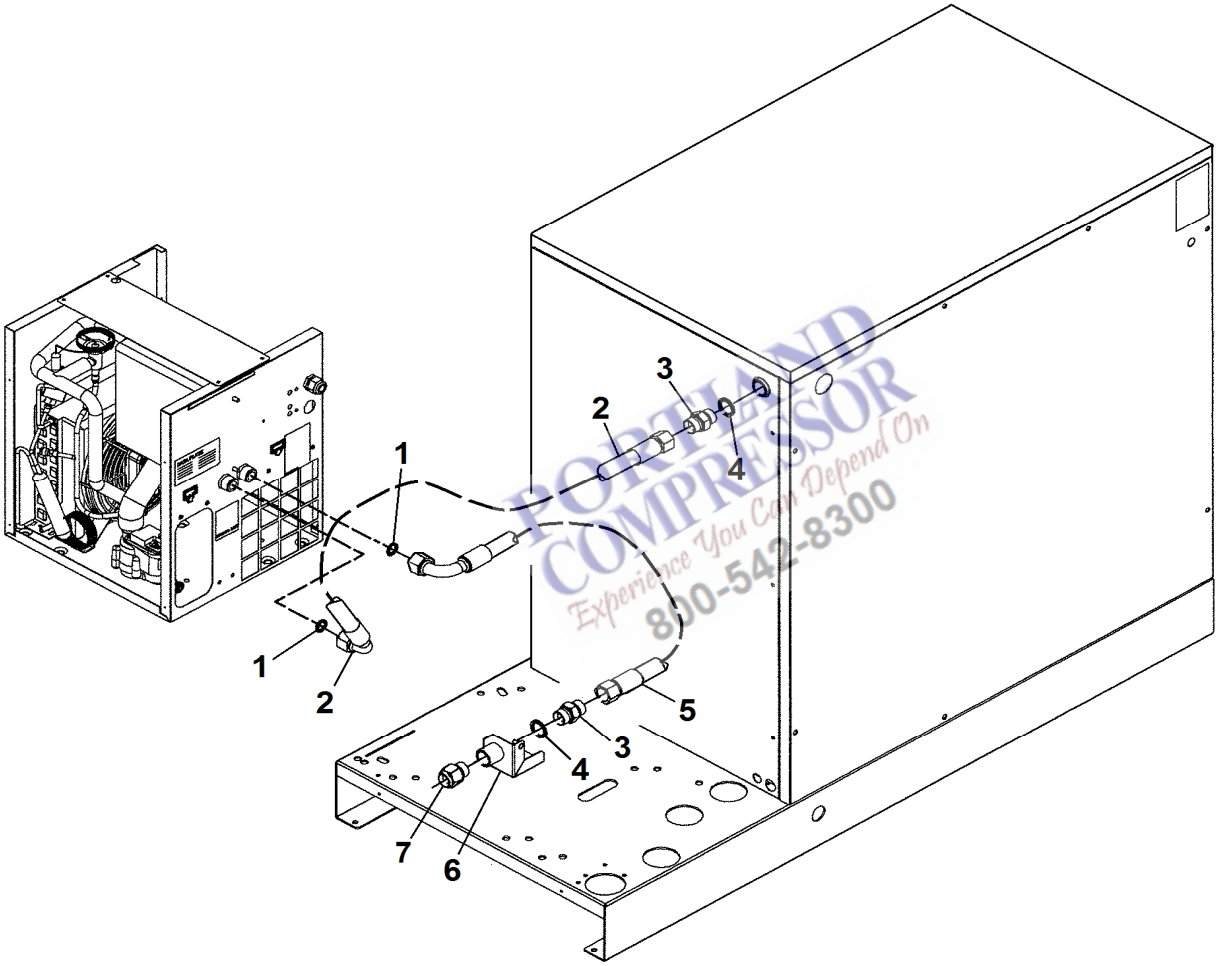

PORTLAND COMPRESSOR
Experience You Can Depend On
800-542-8300

TAV. 14		Q.tà - Q.ty - Q.te - Anz. - Cant.																								Pipe air dryer (A4-A4+) version FM FF
		HP 10 / kW 7,5									HP 15 / kW 11															
Rif. N. Ref. No Nr. Rèf. Bild Nr. Ref. N.	N. ordinaz. Part. num. Nr. Pièce Teil num. Codigo	4152018588	4152018600								4152018589	4152018601														DESCRIPTION
1	0661 1000 40	2	2								2	2														SEAL WASHER
2	2202 8681 03	1	1								1	1														FLEXIBLE
3	0603 4243 02	2	2								2	2														NIPPLE
4	0661 1000 43	2	2								2	2														SEAL WASHER
5	2202 8681 20	1	1								1	1														FLEXIBLE
6	2204 1216 00	1	1								1	1														STIRRUP AIR DELIVERY
7	0605 8350 44	1	1								1	1														BUSHING

PORTLAND COMPRESSOR
Experience You Can Depend On
800-542-8300

TAV. 15

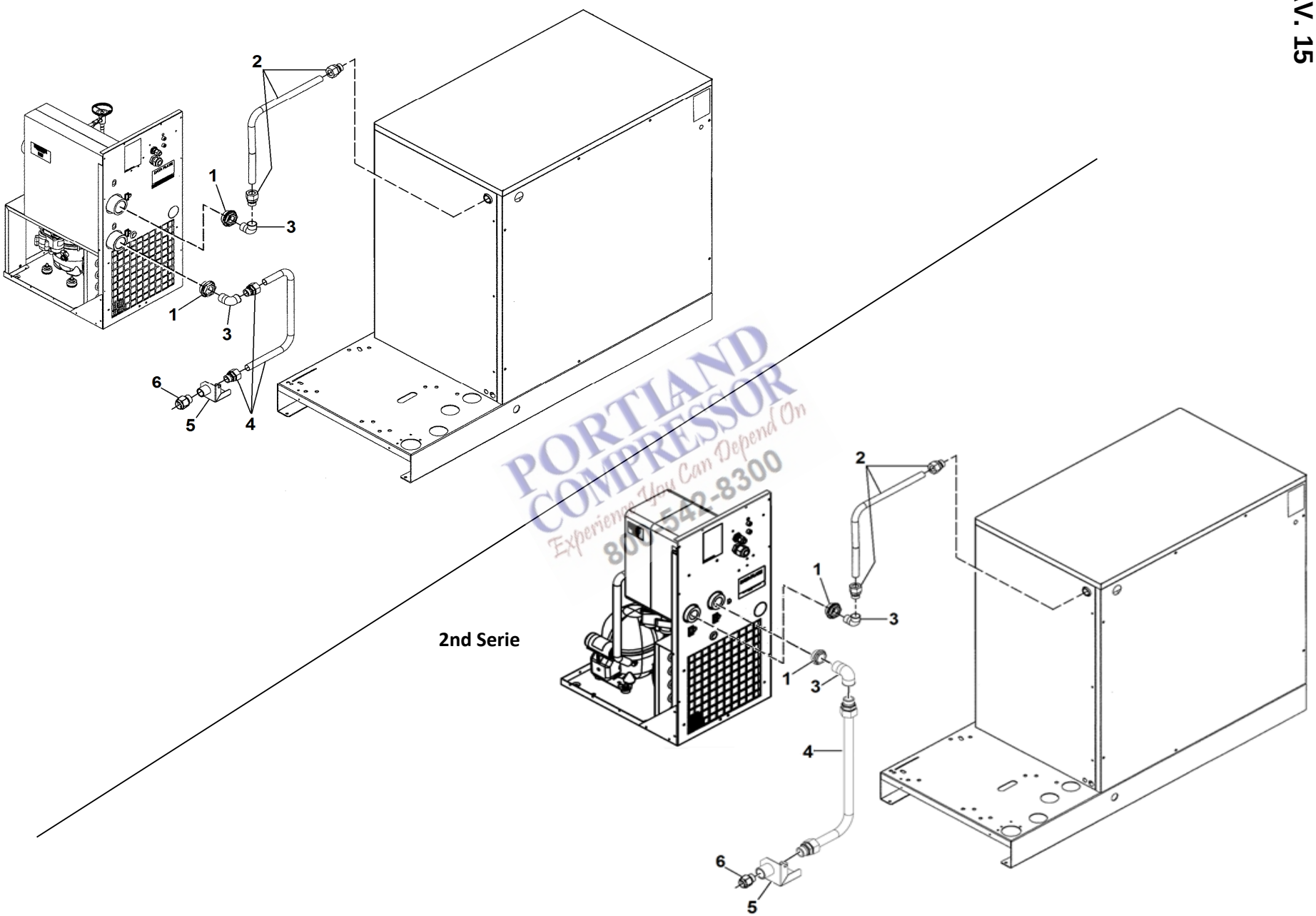

PORTLAND COMPRESSOR
Experience You Can Depend On
800-542-8300

TAV. 15

Pipe dryer (A6-7 / E6) version FM FF

Rif. N. Ref. No Nr. Rèf. Bild Nr. Ref. N.	N. ordinaz. Part. num. Nr. Pièce Teil num. Codigo	Nota- Note-	Q.tà - Q.ty - Q.te - Anz. - Cant. HP 20 / kW 15		DESCRIPTION
			4152018590	4152018602	
1	2202 9285 08		2	2	REDUCTION
1	2202 9285 02	(1)	2	2	REDUCTION
2	2204 1221 00		1	1	PIPE AIR DELIVERY
2	2204 1070 06	(1)	1	1	INLET PIPE
3	0560 1306 03		2	2	ELBOW
4	2204 1224 00		1	1	PIPE AIR DRYER
4	2204 1070 07	(1)	1	1	OUTLET PIPE
5	2204 1216 00		1	1	STIRRUP AIR DELIVERY
6	0605 8350 44		1	1	BUSHING

Note 1 : Dal seguente numero di serie in avanti:, From following serial number:, Valable à partir du numéro de série suivant:, Gültig ab Seriennummer:, A partir del siguente número de serie:
1) ITJ 194401

PORTLAND COMPRESSOR
Experience You Can Depend On
800-542-8300

TAV. 16

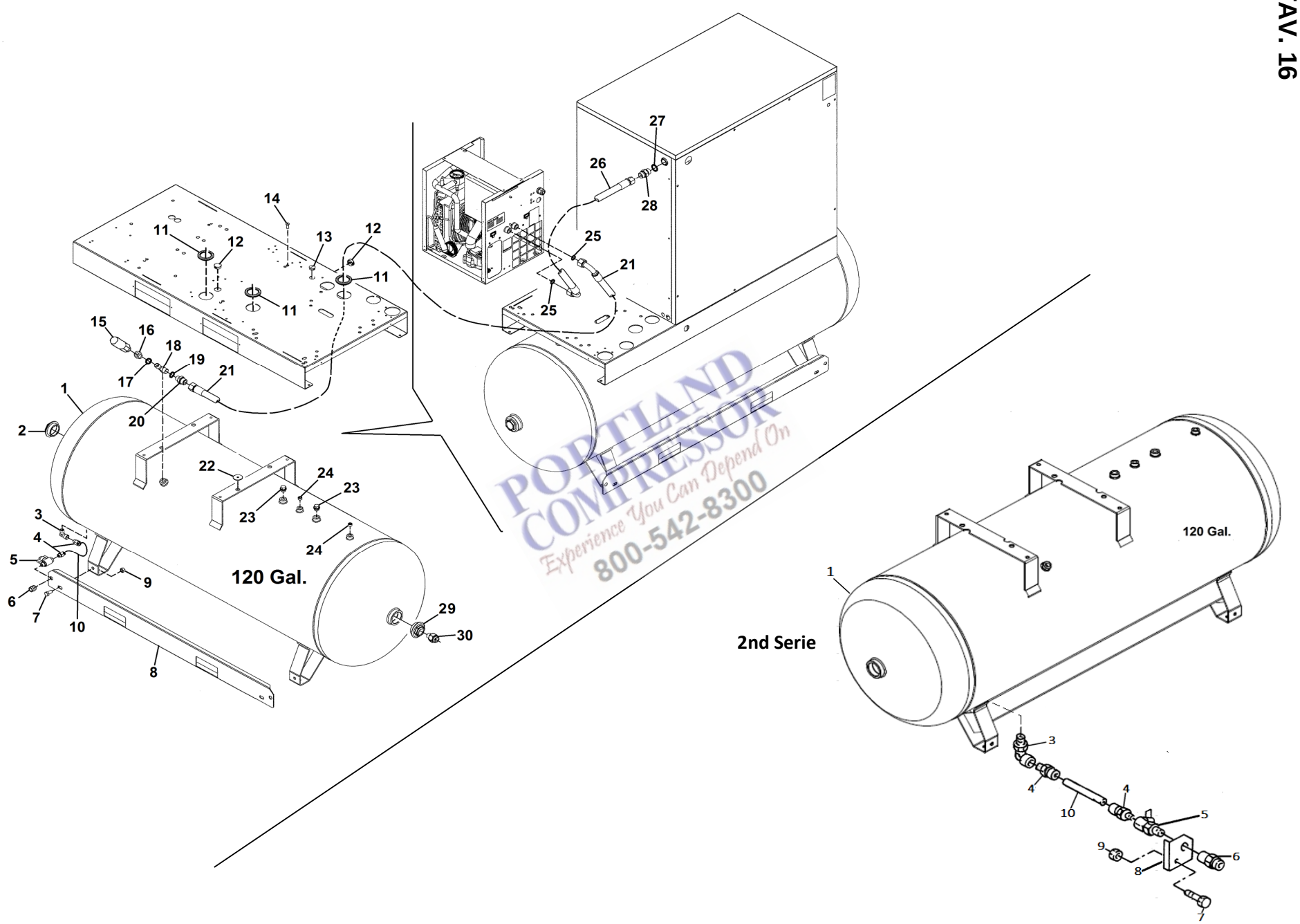

PORTLAND COMPRESSOR
Experience You Can Depend On
800-542-8300

TAV. 16		Q.tà - Q.ty - Q.te - Anz. - Cant.																									AIR RECEIVER (DRYER A4-A4+)
		HP 10 / kW 7,5											HP 15 / kW 11														
Rif. N. Ref. No Nr. Rèf. Bild Nr. Ref. N.	N. ordinaz. Part. num. Nr. Pièce Teil num. Codigo	4152018594	4152018606	4152018982									4152018595	4152018607	4152018983												DESCRIZIONE - DESCRIPTION - DESIGNATION - BESCHREIBUNG - DESIGNACION
1	2202 9783 36	1	1	1									1	1	1												AIR TANK (1st Serie)
1	2202 9783 71	1	1	1									1	1	1												AIR TANK (2nd Serie)
2	2200 7509 11	1	1	1									2	2	2												PLUG
3	0605 9500 42	1	1	1									1	1	1												FITTING
4	0583 8100 89	2	2	2									2	2	2												COUPLING
5	0852 0010 09	1	1	1									1	1	1												VALVE
6	0607 1150 08	1	1	1									1	1	1												SOCKET
7	0147 1400 03	4	4	4									4	4	4												SCREW
8	2203 0343 16	2	2	2									2	2	2												STIRRUP **(1st Serie)**
8	2202 7053 00	1	1	1									1	1	1												STIRRUP **(2nd Serie)**
9	0266 2112 00	4	4	4									4	4	4												NUT
10	0070 6002 64	X	X	X									X	X	X												PIPE (IN METERS)
11	1088 0803 08	3	3	3									3	3	3												GROMMET
12	0697 9810 91	2	2	2									2	2	2												PLUG
13	0686 9253 26	1	1	1									1	1	1												PLUG
14	0216 1100 13	4	4	4									4	4	4												SCREW
15	0830 1009 67	1	1	1									1	1	1												SAFETY VALVE
16	2203 0351 00	1	1	1									1	1	1												REDUCER
17	0661 1000 39	1	1	1									1	1	1												SEAL WASHER
18	9740 2028 44	1	1	1									1	1	1												TEE
19	0661 1000 39	1	1	1									1	1	1												SEAL WASHER
20	0603 5522 03	1	1	1									1	1	1												NIPPLE
21	2202 7685 15	1	1	1									1	1	1												FLEXIBLE
22	0300 0129 87	1	1	1									1	1	1												WASHER
23	2200 7509 12	2	2	2									2	2	2												PLUG
24	0686 3115 55	2	2	2									2	2	2												PLUG
25	0661 1000 40	2	2	2									2	2	2												SEAL WASHER
26	2202 8681 03	1	1	1									1	1	1												FLEXIBLE
27	0661 1000 43	1	1	1									1	1	1												SEAL WASHER
28	0603 4243 02	1	1	1									1	1	1												NIPPLE
29	2202 9285 01	1	1	1									1	1	1												REDUCTION
30	0605 8350 44	1	1	1									1	1	1												BUSHING

PORTLAND COMPRESSOR
Experience You Can Depend On
800-5[illegible]-6300

TAV. 17

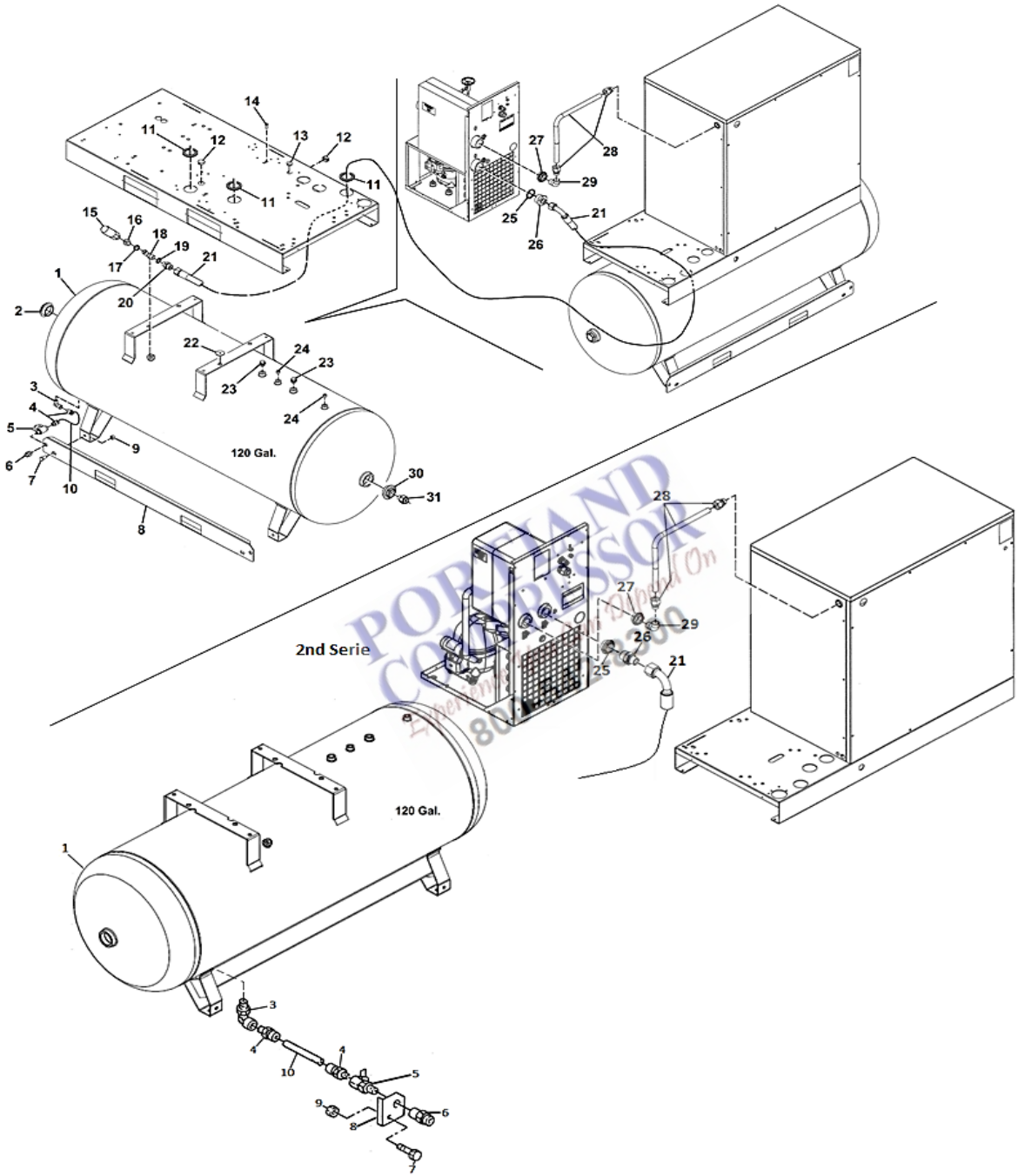

PORTLAND COMPRESSOR
Everything Compressed On
800-

TAV. 17

AIR RECEIVER (DRYER A5-6 / E6)

Q.tà - Q.ty - Q.te - Anz. - Cant.

HP 20 / kW 15

Rif. N. Ref. No Nr. Rèf. Bild Nr. Ref. N.	N. ordinaz. Part. num. Nr. Pièce Teil num. Codigo	Nota-Note-Note-Anm.-Nota	**4152018596**	**4152018608**	**4152018984**	DESCRIPTION
1	2202 9783 36		1	1	1	AIR TANK (1st Serie)
1	2202 9783 71		1	1	1	AIR TANK (2nd Serie)
2	2200 7509 11		1	1	1	PLUG
3	0605 9500 42		1	1	1	FITTING
4	0583 8100 89		2	2	2	COUPLING
5	0852 0010 09		1	1	1	VALVE
6	0607 1150 08		1	1	1	SOCKET
7	0147 1400 03		4	4	4	SCREW
8	2203 0343 16		2	2	2	STIRRUP **(1st Serie)**
8	2202 7053 00		1	1	1	STIRRUP **(2nd Serie)**
9	0266 2112 00		4	4	4	NUT
10	0070 6002 64		X	X	X	PIPE (IN METERS)
11	1088 0803 08		3	3	3	GROMMET
12	0697 9810 91		2	2	2	PLUG
13	0686 9253 26		1	1	1	PLUG
14	0216 1100 13		4	4	4	SCREW
15	0830 1009 67		1	1	1	SAFETY VALVE
16	2203 0351 00		1	1	1	REDUCER
17	0661 1000 39		1	1	1	SEAL WASHER
18	9740 2028 44		1	1	1	TEE
19	0661 1000 39		1	1	1	SEAL WASHER
20	0603 5522 03		1	1	1	NIPPLE
21	2202 8681 08		1	1	1	FLEXIBLE
21	2202 8681 27	**(1)**	1	1	1	HOSE (2nd Serie)
22	0300 0129 87		1	1	1	WASHER
23	2200 7509 12		2	2	2	PLUG
24	0686 3115 55		2	2	2	PLUG
25	0661 1000 61		1	1	1	SEAL WASHER
25	2202 9285 02	**(1)**	1	1	1	REDUCER (2nd Serie)
26	0603 4200 52		1	1	1	NIPPLE
26	0571 0035 52	**(1)**	1	1	1	NIPPLE (2nd Serie)
27	2202 9285 08		1	1	1	REDUCTION
27	2202 9285 02	**(1)**	1	1	1	REDUCTION (2nd Serie)
28	2204 1221 00		1	1	1	PIPE AIR DELIVERY
28	2204 1070 06	**(1)**	1	1	1	INLET PIPE (2nd Serie)
29	0560 1306 03		1	1	1	ELBOW
30	2202 9285 01		1	1	1	REDUCTION
31	0605 8350 44		1	1	1	BUSHING

Note 1 : Dal seguente numero di serie in avanti:, From following serial number:, Valable à partir du numéro de série suivant:, Gültig ab Seriennummer:, A partir del siguente número de serie:
1) ITJ 194401

PORTLAND COMPRESSOR
Experience You Can Depend On
800-522-8300

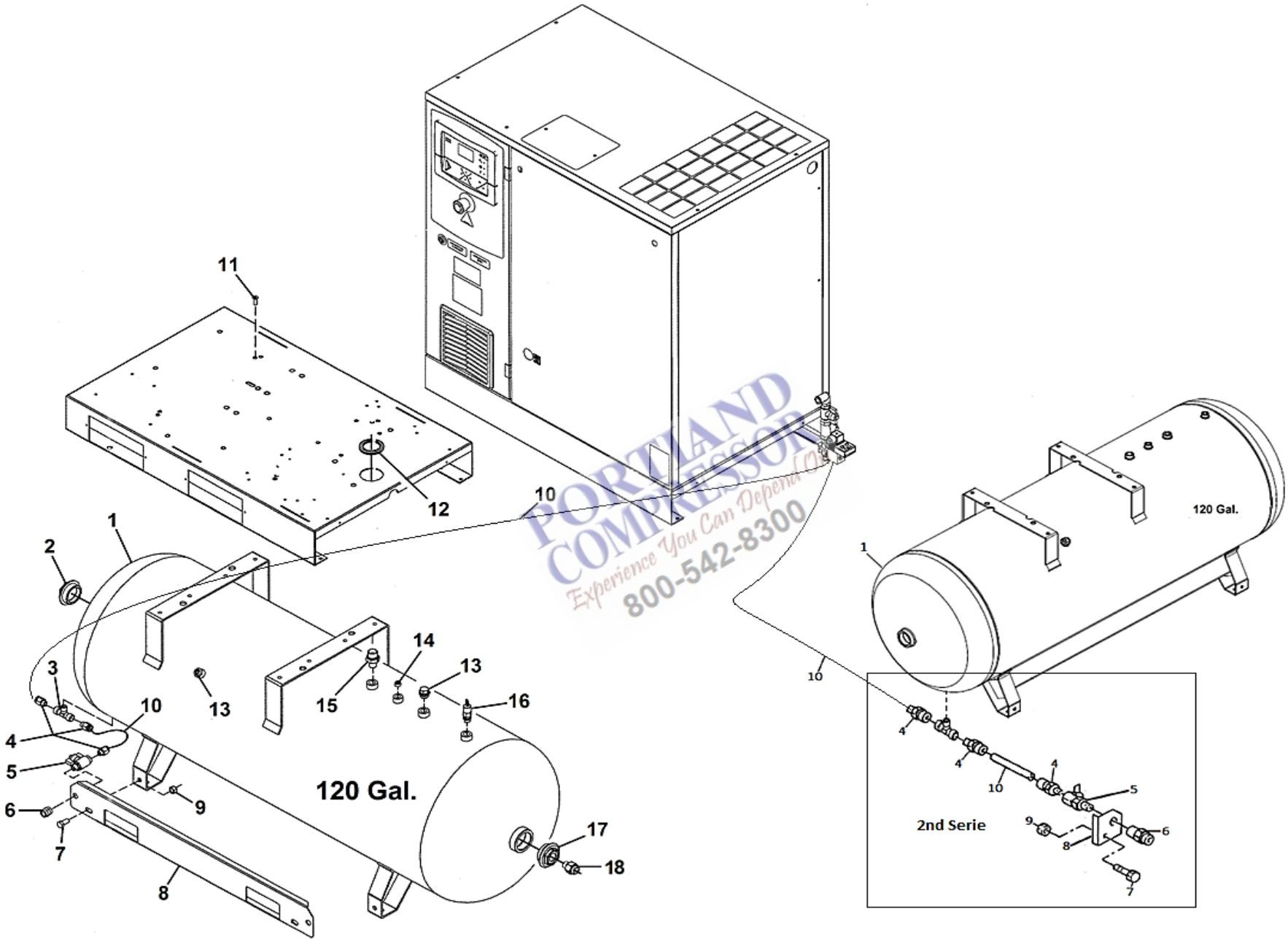

PORTLAND COMPRESSOR
Experience You Can Depend On
800-542-8300

TAV. 18		Q.tà - Q.ty - Q.te - Anz. - Cant.																											AIR RECEIVER 270-500 L. (NO DRYER)
		HP 10 / kW 7,5											HP 15 / kW 11										HP 20 / kW 15						
Rif. N. Ref. No Nr. Rèf. Bild Nr. Ref. N.	N. ordinaz. Part. num. Nr. Pièce Teil num. Codigo	4152018591	4152018603	4152018979									4152018592	4152018604	4152018980								4152018593	4152018605	4152018981					DESCRIPTION
1	2202 9783 36	1	1	1									1	1	1								1	1	1					AIR TANK (1st Serie)
1	2202 9783 71	1	1	1									1	1	1								1	1	1					AIR TANK (2nd Serie)
2	2200 7509 11	1	1	1									1	1	1								1	1	1					PLUG
3	9740 2027 33	1	1	1									1	1	1								1	1	1					TEE
4	0583 8100 89	3	3	3									3	3	3								3	3	3					COUPLING
5	0852 0010 09	1	1	1									1	1	1								1	1	1					BALL VALVE
6	0607 1150 08	1	1	1									1	1	1								1	1	1					SOCKET
7	0147 1400 03	4	4	4									4	4	4								4	4	4					SCREW
8	2203 0343 16	2	2	2									2	2	2								2	2	2					STIRRUP **(1st Serie)**
8	2202 7053 00	1	1	1									1	1	1								1	1	1					STIRRUP (**2nd Serie**)
9	0266 2112 00	4	4	4									4	4	4								4	4	4					NUT
10	0070 6002 64	X	X	X									X	X	X								X	X	X					PIPE (IN METERS)
11	0216 1957 86	4	4	4									4	4	4								4	4	4					SCREW
12	1088 0803 08	1	1	1									1	1	1								1	1	1					GROMMET
13	2200 7509 12	2	2	2									2	2	2								2	2	2					PLUG
14	0686 3115 55	1	1	1									1	1	1								1	1	1					PLUG
15	0606 0000 36	1	1	1									1	1	1								1	1	1					NIPPLE
16	0830 1009 67	1	1	1									1	1	1								1	1	1					SAFETY VALVE
17	2202 9285 01	1	1	1										1	1								1	1	1					REDUCTION
18	0605 8350 44	1	1	1									1	1	1								1	1	1					BUSHING

PORTLAND COMPRESSOR
Experience You Can Depend On
800-542-8500

TAV. 19

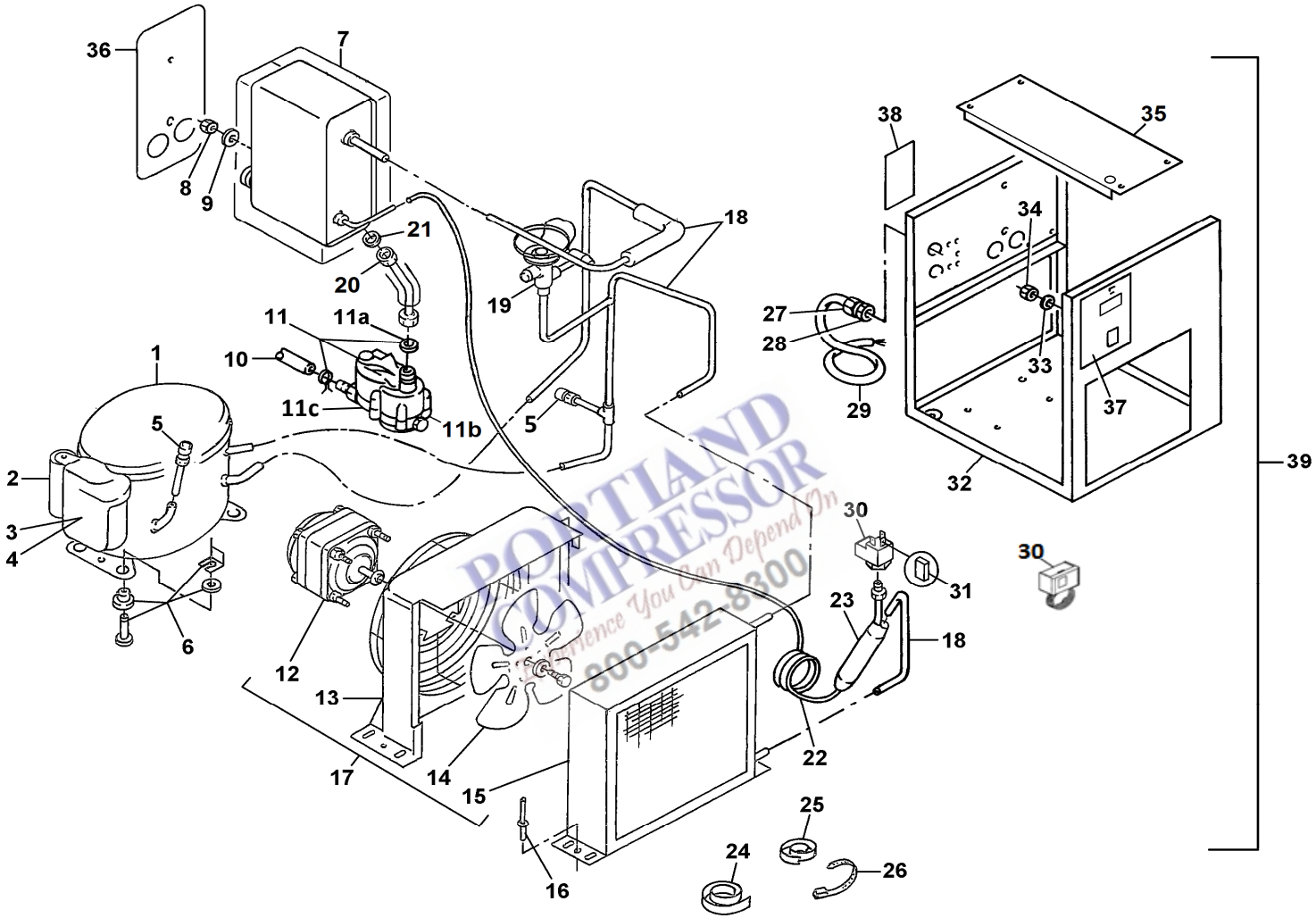

PORTLAND COMPRESSOR
Experience You Can Depend On
800-542-8300

TAV. 19			Q.tà - Q.ty - Q.te - Anz. - Cant.																						AIR DRYER (A4-A4)
			HP 10 / kW 7,5														HP 15 / kW 11								
Rif. N. Ref. No Nr. Rèf. Bild Nr. Ref. N.	N. ordinaz. Part. num. Nr. Pièce Teil num. Codigo	Nota-Note-Note-Anm.-Nota	4152018588	4152018600	4152018606	4152018594	4152018982										4152018589	4152018607	4152018595	4152018601	4152018983				DESCRIZIONE - DESCRIPTION - DESIGNATION - BESCHREIBUNG - DESIGNACION
1	2204200220		1	1	1	1	1																		COMPRESSOR
1	1627177403																1	1	1	1	1				COMPRESSOR
2	2204200223		1	1	1	1	1																		START CAPACITOR (For compressor 2204200220)
2	2202765023																1	1	1	1	1				START CAPACITOR (For compressor 1627177403)
3	2204200222		1	1	1	1	1																		START RELAY (For compressor 2204200220)
3	1617155123																1	1	1	1	1				START RELAY (For compressor 1627177403)
4	2204200221		1	1	1	1	1																		OVERLOAD PROTECTOR (For compressor 2204200220)
4	2202765233																1	1	1	1	1				OVERLOAD PROTECTOR (For compressor 1627177403)
5	2200599743		2	2	2	2	2										2	2	2	2	2				CHECK VALVE
-	2202851600		1	1	1	1	1										1	1	1	1	1				SCHRADER VALVE
-	2204163801		1	1	1	1	1										1	1	1	1	1				PIN
6	2200902681		1	1	1	1	1										1	1	1	1	1				SNUP-ON
7	2202892286		1	1	1	1	1										1	1	1	1	1				EXCHANGER
8	0266210800		2	2	2	2	2										2	2	2	2	2				NUT
9	0300027464		2	2	2	2	2										2	2	2	2	2				WASHER
10	0070725007		X	X	X	X	X										X	X	X	X	X				HOSE (IN METERS)
11	2204213442		1	1	1	1	1										1	1	1	1	1				LDI DRAIN
11a	0663909600		1	1	1	1	1										1	1	1	1	1				O-RING
11b	2200902017		1	1	1	1	1										1	1	1	1	1				**KIT WEAR DRAIN (CHANGE EVERY 4000 HOURS)**
11c	2902016102		1	1	1	1	1										1	1	1	1	1				**KIT FILTER MESH (CHANGE EVERY 2000 HOURS)**
12	2202762206		1	1	1	1	1										1	1	1	1	1				FAN MOTOR
13	2202762103		1			1	1										1		1		1				PROTECTION
13	2203036003			1	1													1		1					PROTECTION
14	2202762302		1	1	1	1	1										1	1	1	1	1				FAN
15	2202762004		1	1	1	1	1										1	1	1	1	1				CONDENSER
16	0129327042		2	2	2	2	2										2	2	2	2	2				BLIND RIVET
17	2202751288		1			1	1										1		1		1				ASS. CONDENSER
17	2203035904			1	1													1		1					ASS. CONDENSER
18	2203017880		1	1	1	1	1										1	1	1	1	1				ASSEMBLY PIPE
19	2202732404		1	1	1	1	1										1	1	1	1	1				BY-PASS VALVE
20	2202889501		1	1	1	1	1										1	1	1	1	1				PIPE
21	2202892400		1	1	1	1	1										1	1	1	1	1				GASKET
22	2202758406		1	1	1	1	1										1	1	1	1	1				CAPILLARY TUBE
23	2202756904		1	1	1	1	1											1		1					FILTER-DRYER
24	2202758701		1	1	1	1	1										1	1	1	1	1				TAPE (IN METERS)
25	0017986267		1	1	1	1	1										1	1	1	1	1				TAPE (IN METERS)
26	0348010120		6	6	6	6	6										6	6	6	6	6				CABLE TIE
27	0698514122		1	1	1	1	1										1	1	1	1	1				CABLE GLAND
28	0697980954		1	1	1	1	1										1	1	1	1	1				NUT
29	2205042621		1	1	1	1	1										1	1	1	1	1				ELECTRIC CABLES
30	2200600678	**(C)**	1	1	1	1	1										1	1	1	1	1				PRESSOSTAT **(1st Serie)**
30	2202004680		1	1	1	1	1										1	1	1	1	1				PRESSOSTAT **(2nd Serie)**
31	2200709906		1	1	1	1	1										1	1	1	1	1				CAP PROTECTION
32	2202975881		1	1	1	1	1										1	1	1	1	1				FRAME
33	0333422000		2	2	2	2	2										2	2	2	2	2				WASHER
34	0266210800		1	1	1	1	1										1	1	1	1	1				NUT
35	2202766200		1	1	1	1	1										1	1	1	1	1				STIRRUP COVER
36	2202893000		1	1	1	1	1										1	1	1	1	1				INSULATION SET

Note C : In caso di sostituzione del Rif. 30 fornire il KIT, If Ref. 30 are replaced supply KIT, En cas de substitution de Réf. 30 fournir le KIT, Im Falle eines Ersatzes der Pos. 30 die KIT mitliefern, En caso de sustitucion de Ref.30 suministrar el KIT: **2200903404 (to ITJ194729); 1089913935 (from ITJ194730)**

PORTLAND COMPRESSOR
Experience the difference
800-532-8300

TAV. 19

AIR DRYER (A4-A4)

Rif. N. Ref. No Nr. Rèf. Bild Nr. Ref. N.	N. ordinaz. Part. num. Nr. Pièce Teil num. Codigo	Nota-Note-Note-Anm.-Nota	Q.tà - Q.ty - Q.te - Anz. - Cant. HP 10 / kW 7,5														Q.tà - Q.ty - Q.te - Anz. - Cant. HP 15 / kW 11														DESCRIZIONE - DESCRIPTION - DESIGNATION - BESCHREIBUNG - DESIGNACION
			4152018588	4152018600	4152018606	4152018594	4152018982										4152018589	4152018607	4152018595	4152018601	4152018983										
37	2203076401		1	1	1	1	1										1	1	1	1	1										LABEL INSTRUCTION
38	1079992655		1	1	1	1	1										1	1	1	1	1										WARNING LABEL
39	2200902861		1			1																									DRYER V.115/60 (A4)
39	2200902849			1	1																1										DRYER V.115/60 (A4)
39	2200902807						1										1	1													DRYER V.115/60 (A4+)
39	2200902883																		1	1											DRYER V.115/60 (A4+)

PORTLAND COMPRESSOR
Experience You Can Depend On
800-542-8300

NOTE

PORTLAND COMPRESSOR
Experience You Can Depend On
800-542-8300

TAV. 20

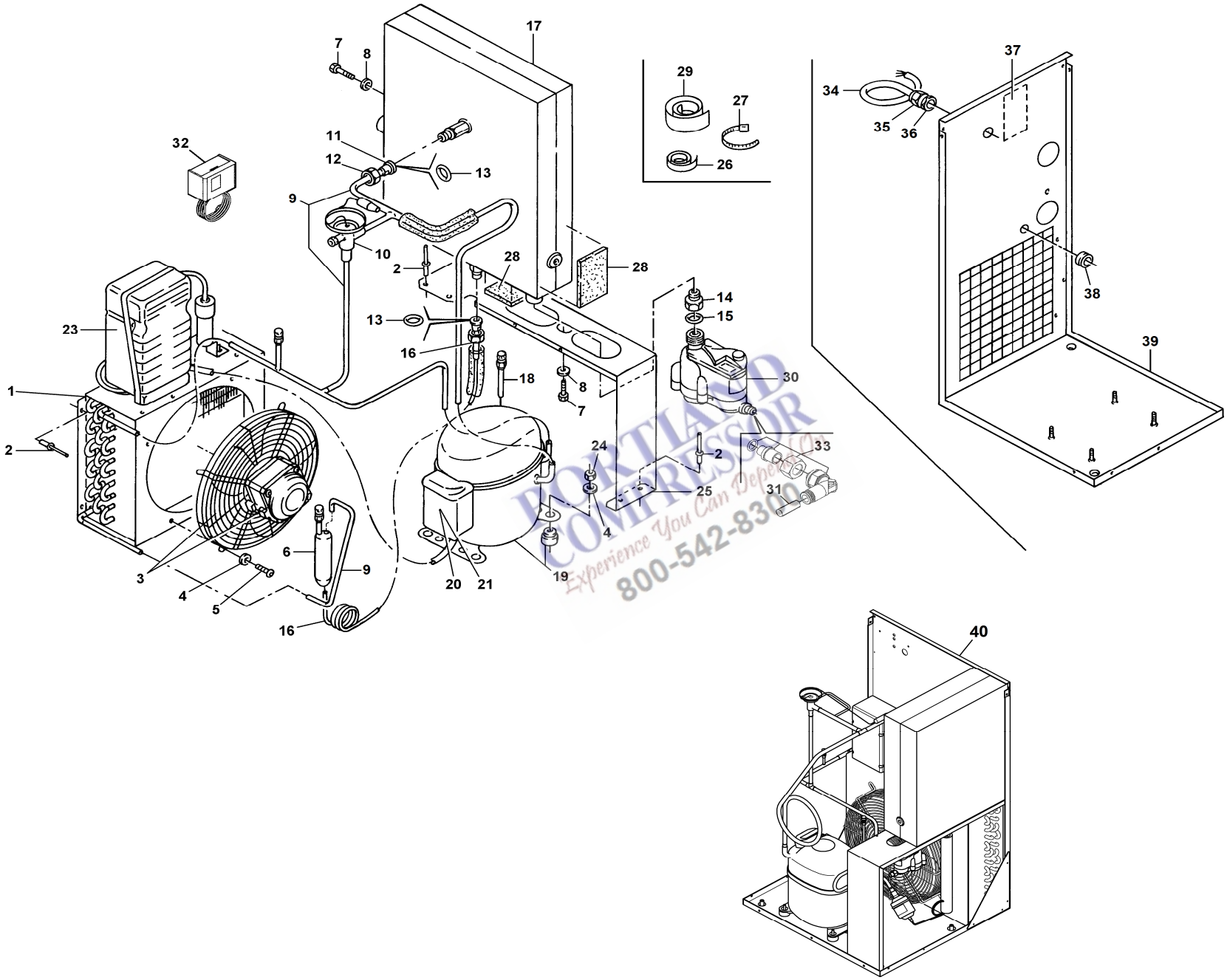

PORTLAND COMPRESSOR
Experience You Can Depend On
800-542-8300

TAV. 20

Q.tà - Q.ty - Q.te - Anz. - Cant.

HP 20 / kW 15

AIR DRYER (A6/7)

Rif. N. Ref. No Nr. Rèf. Bild Nr. Ref. N.	N. ordinaz. Part. num. Nr. Pièce Teil num. Codigo	Nota-Note-Note-Anm.-Nota	**4152018590**	**4152018596**	**4152018602**	**4152018608**	**4152018984**	DESCRIZIONE - DESCRIPTION - DESIGNATION - BESCHREIBUNG - DESIGNACION
1	2202735102		1	1	1	1	1	CONDENSER COIL
2	0129327040		30	30	30	30	30	BLIND RIVET
3	2202737304		1	1	1	1	1	MOTOR FAN
4	0300027464		8	8	8	8	8	WASHER
5	0215000391		4	4	4	4	4	SCREW
6	1617299601		1	1	1	1	1	FILTER-DRYER
7	0147136203		3	3	3	3	3	SCREW
8	0300027417		3	3	3	3	3	WASHER
9	2203026780		1	1			1	ASSEMBLY PIPE **(1st Serie)**
9	2203027180	**(1)**	1	1			1	ASSEMBLY PIPE **(2nd Serie)**
9	2203081180				1	1		ASSEMBLY PIPE **(1st Serie)**
9	2203082280	**(1)**			1	1		ASSEMBLY PIPE **(2nd Serie)**
10	2202732402		1	1			1	BY-PASS VALVE
10	1624290600				1	1		BY-PASS VALVE
11	2202746603		1	1	1	1	1	SLEEVE
12	2202746604		1	1	1	1	1	ROTALOCK NUT
13	2202742501		2	2	2	2	2	O-RING
14	2202770301		1	1	1	1	1	COUPLING
15	0663909600		1	1	1	1	1	O-RING
16	2202741302		1	1	1	1	1	CAPILLARY TUBE
17	2202736682		1	1	1	1	1	EXCHANGER **(1st Serie)**
17	2202736782	**(1)**	1	1	1	1	1	EXCHANGER **(2nd Serie)**
18	2200599743		2	2	2	2	2	CHECK VALVE
19	2204200275		1	1			1	COMPRESSOR
19	2204200290				1	1		COMPRESSOR
20	2202765123		1	1	1	1	1	START RELAY (For compressor 2203026507, 2203026512)
21	2202765249				1	1		OVERLOAD PROTECTOR
21	2202765230		1	1	1	1	1	OVERLOAD PROTECTOR (For compressor 2203026507, 2203026512)
23	2202765020		1	1	1	1	1	START CAPACITOR
24	0266210800		4	4	4	4	4	SCREW
25	2202736500		1	1	1	1	1	STIRRUP
26	0017986267		X	X	X	X	X	TAPE (IN METERS)
27	0348010120		10	10	10	10	10	CABLE TIE
28	0395101005		X	X	X	X	X	INSULATION SET
29	2202758701		X	X	X	X	X	TAPE (IN METERS)
30	2204213444		1	1	1	1	1	LDI DRAIN
-	2200902017		1	1	1	1	1	**KIT WEAR DRAIN (CHANGE EVERY 4000 HOURS)**
-	2902016102		1	1	1	1	1	**KIT FILTER MESH (CHANGE EVERY 2000 HOURS)**
31	0070725007		X	X	X	X	X	HOSE (IN METERS)
32	1089913923		1	1			1	PRESSURE SWITCH
32	1089913935				1	1		PRESSURE SWITCH
33	2204135980		1	1	1	1	1	KIT ELBOW DRAIN
34	9828443562		1	1	1	1	1	ELECTRIC CABLES
35	0698514122		1	1	1	1	1	CABLE GLAND
36	0697980954		1	1	1	1	1	NUT
37	1079990348		1	1	1	1	1	WARNING LABEL
38	0989422008		1	1	1	1	1	GROMMET
39	2202736082		1	1	1	1	1	FRAME
40	2200902862		1	1			1	DRYER V.115/60 (A6/7)
40	2200902869				1	1		DRYER V.115/60 (A6/7)

Note 1 : Dal seguente numero di serie in avanti:, From following serial number:, Valable à partir du numéro de série suivant:, Gültig ab Seriennummer:, A partir del siguente número de serie:
1) CAI 813128

PORTLAND COMPRESSOR
Experience You Can Depend On
800-542-8300

TAV. 20A

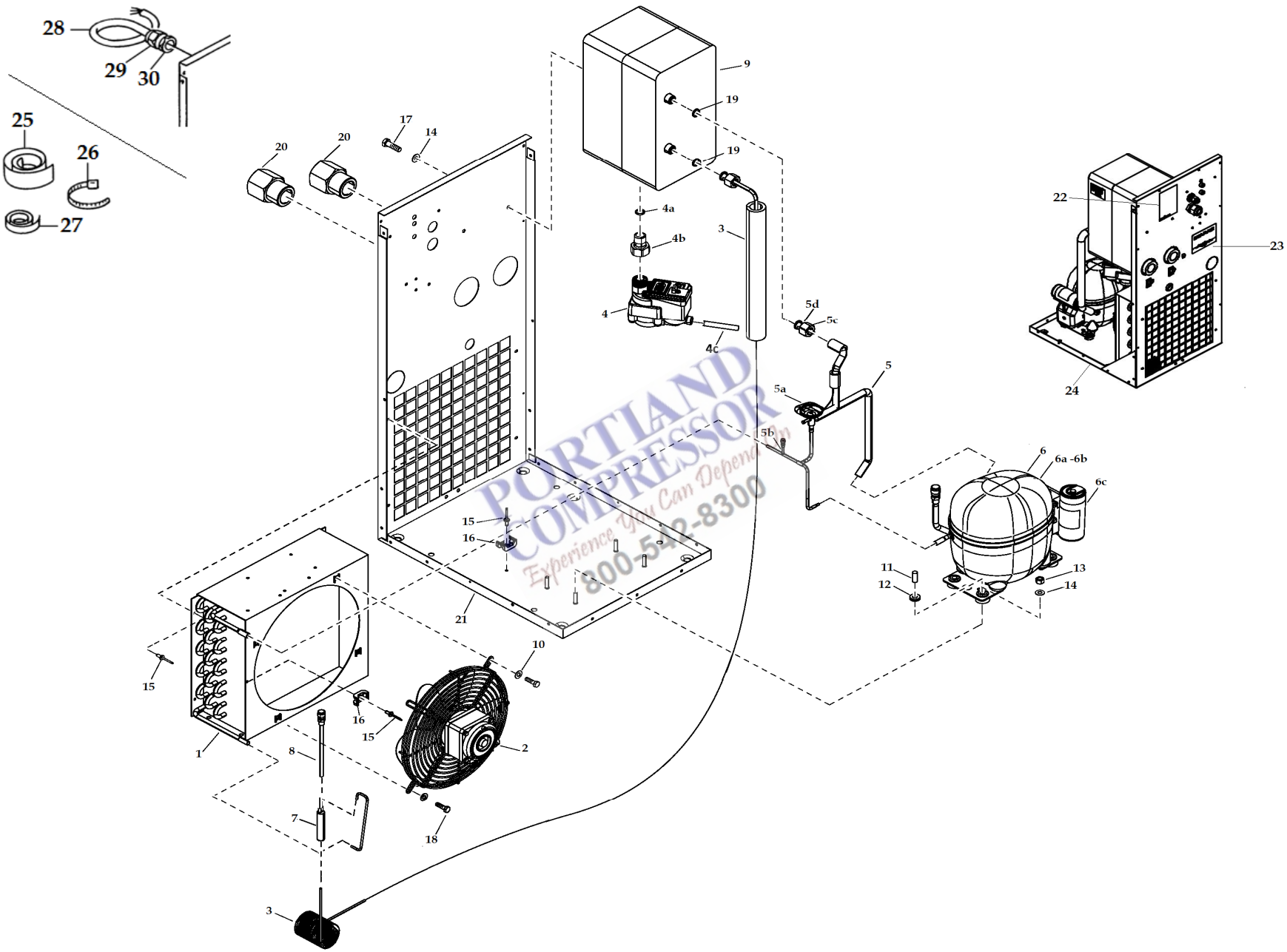

PORTLAND COMPRESSOR
Experience You Can Depend On
800-542-8300

TAV. 20A			Q.tà - Q.ty - Q.te - Anz. - Cant.																															AIR DRYER (E6)
			HP 20 / kW 15																															
Rif. N. Ref. No Nr. Rèf. Bild Nr. Ref. N.	N. ordinaz. Part. num. Nr. Pièce Teil num. Codigo	Nota-Note-Note-Anm.-Nota	**4152018590**	**4152018596**	**4152018984**	**4152018602**	**4152018608**																											DESCRIZIONE - DESCRIPTION - DESIGNATION - BESCHREIBUNG - DESIGNACION
1	2202735102		1	1	1	1	1																											CONDENSOR
2	2202737304		1	1	1	1	1																											FAN MOTOR
3	2202741312		1	1	1	1	1																											CAPILLARY TUBE
4	2204213444		1	1	1	1	1																											LDI DRAIN
4a	0663909600		1	1	1	1	1																											O-RING
4b	2202770301		1	1	1	1	1																											PIPE FITTING
4c	0070600249		1	1	1	1	1																											PLASTIC TUBE
-	2200902017		1	1	1	1	1																											**KIT WEAR DRAIN (CHANGE EVERY 4000 HOURS)**
-	2902016102		1	1	1	1	1																											**KIT FILTER MESH (CHANGE EVERY 2000 HOURS)**
5	2204205880		1	1	1	1	1																											PIPE ASSY
5a	1624290600		1	1	1	1	1																											HOT GAS B-P VAL.
5b	2202851600		2	2	2	2	2																											NO RET.VALVE
5c	2202746602		1	1	1	1	1																											NUT ROTALOCK
5d	2202746601		1	1	1	1	1																											SLEEVE FOR NUT
6	2203083803		1	1	1	1	1																											COMPRESSOR
6a	2202765140		1	1	1	1	1																											START RELAY
6b	2202765250		1	1	1	1	1																											OVERLOAD PROTECTOR
6c	2202765036		1	1	1	1	1																											START CAPACITOR
7	1617299601		1	1	1	1	1																											FILTER DRYER
8	2200599743		1	1	1	1	1																											CHECK VALVE+PIPE
9	2204184481		1	1	1	1	1																											HEAT EXCH.ASSY
10	0300027464		4	4	4	4	4																											WASHER
11	2204164051		4	4	4	4	4																											METAL BUSHING
12	2204164001		4	4	4	4	4																											RUBBER GROMMET
13	0291118529		4	4	4	4	4																											TWOLOK CS NUT
14	0300027464		6	6	6	6	6																											WASHER
15	0129327040		6	6	6	6	6																											BLIND RIVET
16	0348011003		2	2	2	2	2																											ANCHOR PLATE
17	0147124703		2	2	2	2	2																											HEX.BOLT
18	0215000391		4	4	4	4	4																											SCREW
19	2202742501		2	2	2	2	2																											RING FOR ROTALOCK
20	0605835040		2	2	2	2	2																											BUSHING
21	2204205781		1	1	1	1	1																											FRAME BASE
22	1079990348		1	1	1	1	1																											WARNING LABEL
23	1627182800		1	1	1	1	1																											DECAL WARNING
24	2200903771		1	1	1																													DRYER (E6)115/60 "From ITJ194400"
24	2200903774					1	1																											DRYER (E6)115/60 "From ITJ194400"
25	2202758701		X	X	X	X	X																											TAPE (IN METERS)
26	0348010120		10	10	10	10	10																											CABLE TIE
27	0017986267		X	X	X	X	X																											TAPE (IN METERS)
28	2205042391		1	1	1	1	1																											ELECTRIC CABLES (WIRE)
29	0698514122		1	1	1	1	1																											CABLE GLAND
30	0697980954		1	1	1	1	1																											NUT

PORTLAND COMPRESSOR
Experience Your Can Depend On
800-542-8300

TAV. 21

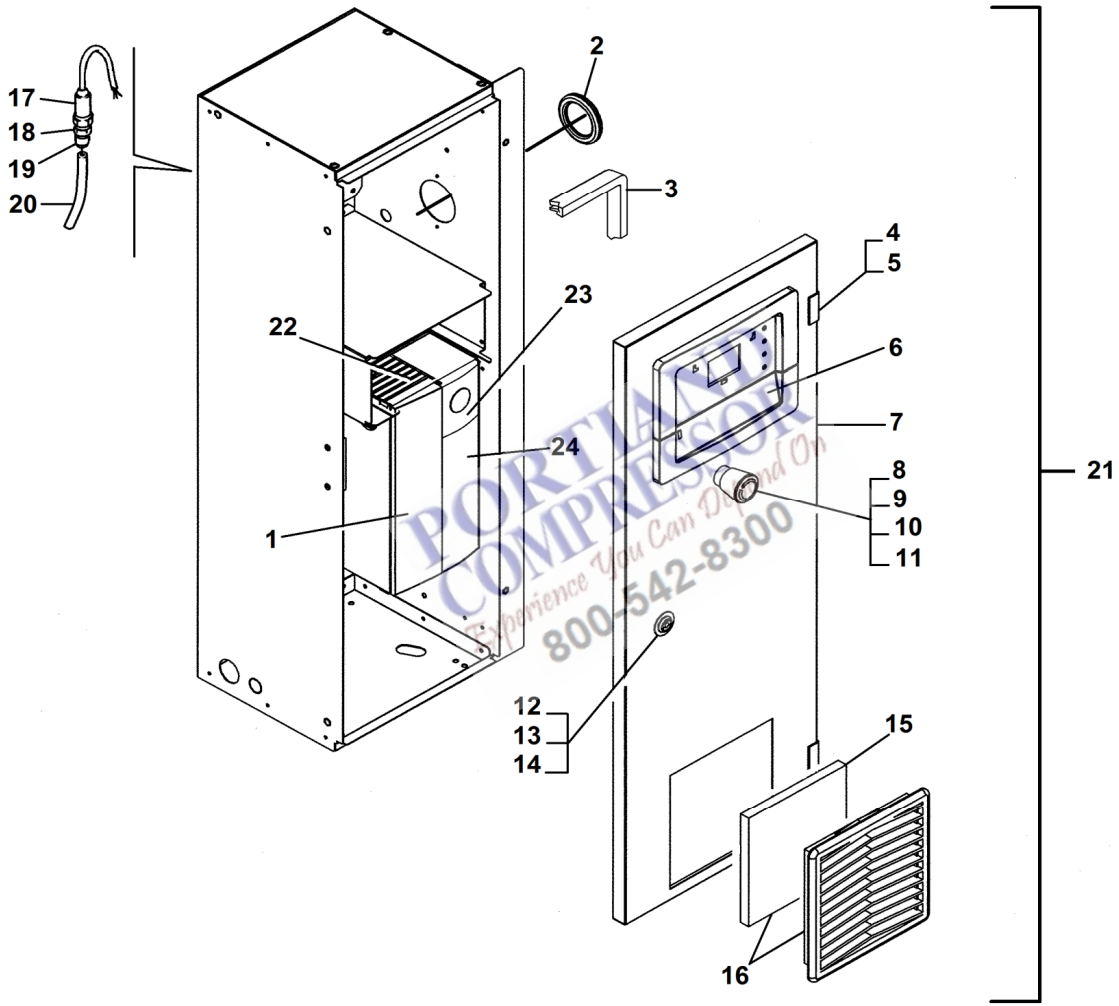

PORTLAND COMPRESSOR
Experience You Can Depend On
800-542-8300

TAV. 21

ELECTRIC BORAD CONTROL PANEL

Q.tà - Q.ty - Q.te - Anz. - Cant.

Rif. N. Ref. No Nr. Rèf. Bild Nr. Ref. N.	N. ordinaz. Part. num. Nr. Pièce Teil num. Codigo	Nota-Note-Note-Anm.-Nota	HP 10 / Kw 7,5															HP 15 / Kw 11																HP 20 / kW 15														DESCRIPTION
			4152018588	4152018600	4152018585	4152018597	4152018591	4152018603	4152018594	4152018606	4152018979	4152018662	4152018665	4152018668	4152018671	4152018982	4152018985	4152018589	4152018601	4152018586	4152018598	4152018592	4152018604	4152018595	4152018607	4152018978	4152018663	4152018666	4152018669	4152018672	4152018980	4152018983	4152018986	4152018590	4152018602	4152018587	4152018599	4152018593	4152018605	4152018596	4152018608	4152018981	4152018664	4152018667	4152018670	4152018673	4152018984	
1	2200 9038 00		1	1	1	1	1	1	1	1	1	1	1	1	1	1	1																																KIT CONVERTER
1	2200 9038 01																	1	1	1	1	1	1	1	1	1	1	1	1	1	1	1	1	1	1	1	1	1	1	1	1	1	1	1	1	1	1	KIT CONVERTER
2	1088 0803 08		1	1	1	1	1	1	1	1	1	1	1	1	1	1	1	1	1	1	1	1	1	1	1	1	1	1	1	1	1	1	1	1	1	1	1	1	1	1	1	1	1	1	1	1	1	GROMMET
3	2202 8453 00		X	X	X	X	X	X	X	X	X	X	X	X	X	X	X	X	X	X	X	X	X	X	X	X	X	X	X	X	X	X	X	X	X	X	X	X	X	X	X	X	X	X	X	X	X	X	DOOR SEAL (IN METERS)
4	2202 7222 00		2	2	2	2	2	2	2	2	2	2	2	2	2	2	2	2	2	2	2	2	2	2	2	2	2	2	2	2	2	2	2	2	2	2	2	2	2	2	2	2	2	2	2	2	2	HINGES
5	0216 1957 79		2	2	2	2	2	2	2	2	2	2	2	2	2	2	2	2	2	2	2	2	2	2	2	2	2	2	2	2	2	2	2	2	2	2	2	2	2	2	2	2	2	2	2	2	2	SCREW
6	1900 5200 78		1	1	1	1	1	1	1	1		1	1	1	1			1	1	1	1	1	1	1	1		1	1	1	1				1	1	1	1	1	1	1	1		1	1	1	1		CONTROL CARD
6	1900 5200 88										1					1	1									1					1	1	1									1					1	GRAPHIC MB ES4000
7	2204 1087 16		1	1	1	1	1	1	1	1	1	1	1	1	1	1	1	1	1	1	1	1	1	1	1	1	1	1	1	1	1	1	1	1	1	1	1	1	1	1	1	1	1	1	1	1	1	DOOR
8	1089 9513 34		1		1		1		1		1					1		1		1		1		1		1					1	1		1		1		1		1		1					1	EMERGENCY STOP PUSH BUTTON
8	1089 9337 72			1		1		1		1		1	1	1	1		1		1		1		1		1		1	1	1	1			1		1		1		1		1		1	1	1	1		EMERGENCY STOP PUSH BUTTON
9	1089 9513 30		1		1		1		1		1					1		1		1		1		1		1					1	1		1		1		1		1		1					1	N.C. CONTACT
9	1089 0362 50			1		1		1		1		1		1	1		1		1		1		1		1		1	1	1	1			1		1		1		1		1		1	1	1	1		N.C. CONTACT
10	1089 9513 28		1		1		1		1		1					1		1		1		1		1		1					1	1		1		1		1		1		1					1	BUTTON SUPPORT
10	1089 0362 80			1		1		1		1		1	1	1	1		1		1		1		1		1		1	1	1	1			1		1		1		1		1		1	1	1	1		BUTTON SUPPORT
11	1089 9125 13		1	1	1	1	1	1	1	1	1	1	1	1	1	1	1	1	1	1	1	1	1	1	1	1	1	1	1	1	1	1	1	1	1	1	1	1	1	1	1	1	1	1	1	1	1	YELLOW RING
12	2200 5402 76		1	1	1	1	1	1	1	1	1	1	1	1	1	1	1	1	1	1	1	1	1	1	1	1	1	1	1	1	1	1	1	1	1	1	1	1	1	1	1	1	1	1	1	1	1	DOOR LOCK
13	2202 2512 59		1	1	1	1	1	1	1	1	1	1	1	1	1	1	1	1	1	1	1	1	1	1	1	1	1	1	1	1	1	1	1	1	1	1	1	1	1	1	1	1	1	1	1	1	1	DRAW LATCH
14	2200 5402 64		1	1	1	1	1	1	1	1	1	1	1	1	1	1	1	1	1	1	1	1	1	1	1	1	1	1	1	1	1	1	1	1	1	1	1	1	1	1	1	1	1	1	1	1	1	KEY
15	1089 9556 73		1	1	1	1	1	1	1	1	1	1	1	1	1	1	1	1	1	1	1	1	1	1	1	1	1	1	1	1	1	1	1	1	1	1	1	1	1	1	1	1	1	1	1	1	1	AIR INLET FILTER
16	1089 9556 67		1	1	1	1	1	1	1	1	1	1	1	1	1	1	1	1	1	1	1	1	1	1	1	1	1	1	1	1	1	1	1	1	1	1	1	1	1	1	1	1	1	1	1	1	1	AIR INLET FILTER GREY
17	2204 1039 00		1	1	1	1	1	1	1	1	1	1	1	1	1	1	1	1	1	1	1	1	1	1	1	1	1	1	1	1	1	1	1	1	1	1	1	1	1	1	1	1	1	1	1	1	1	PRESSURE TRANSMITTER
18	2204 1038 00		1	1	1	1	1	1	1	1	1					1		1	1	1	1	1	1	1	1	1					1	1		1	1	1	1	1	1	1	1	1					1	ADAPTER
19	2200 7505 70		1	1	1	1	1	1	1	1	1					1		1	1	1	1	1	1	1	1	1					1	1		1	1	1	1	1	1	1	1	1					1	ADAPTER
19	2204 1407 00											1	1	1	1		1										1	1	1	1			1										1	1	1	1		STRAIGHT FEMALE FITTING
20	0070 7250 04		X	X	X	X	X	X	X	X	X	X	X	X	X	X	X	X	X	X	X	X	X	X	X	X	X	X	X	X	X	X	X	X	X	X	X	X	X	X	X	X	X	X	X	X	X	PIPE (IN METERS)
21	2205 0300 35				1		1																																									ELECTRICAL CUBICLE
21	2205 0300 37																			1		1														1		1										ELECTRICAL CUBICLE
21	2205 0300 36		1						1																																							ELECTRICAL CUBICLE
21	2205 0300 38																	1						1										1						1								ELECTRICAL CUBICLE
21	2205 0301 15					1		1																																								ELECTRICAL CUBICLE
21	2205 0301 17																				1		1														1		1									ELECTRICAL CUBICLE
21	2205 0301 16			1						1																																						ELECTRICAL CUBICLE
21	2205 0301 18																		1						1										1						1							ELECTRICAL CUBICLE
21	2205 0314 01											1		1																																		ELECTRICAL CUBICLE
21	2205 0314 02												1		1																																	ELECTRICAL CUBICLE
21	2205 0314 03																										1		1														1		1			ELECTRICAL CUBICLE
21	2205 0314 04																											1		1														1		1		ELECTRICAL CUBICLE
21	2205 0300 57																									1					1											1						ELECTRICAL CUBICLE
21	2205 0300 55										1																																					ELECTRICAL CUBICLE
21	2205 0300 56															1																																ELECTRICAL CUBICLE
21	2205 0300 58																															1															1	ELECTRICAL CUBICLE
21	2205 0314 11																1																1															ELECTRICAL CUBICLE
22	2901 3578 00		1	1	1	1	1	1	1	1	1	1	1	1	1	1	1	1	1	1	1	1	1	1	1	1	1	1	1	1	1	1	1															COOLING FAN
22	2901 3577 00																																	1	1	1	1	1	1	1	1	1	1	1	1	1	COOLING FAN
23	2901 3570 00		1	1	1	1	1	1	1	1	1	1	1	1	1	1	1	1	1	1	1	1	1	1	1	1	1	1	1	1	1	1	1	1	1	1	1	1	1	1	1	1	1	1	1	1	1	LCP CONTROL
24	2901 3580 00		1	1	1	1	1	1	1	1	1	1	1	1	1	1	1	1	1	1	1	1	1	1	1	1	1	1	1	1	1	1	1	1	1	1	1	1	1	1	1	1	1	1	1	1	1	CONTROL BOARD

PORTLAND COMPRESSOR
Authorized Distributor
800-542-3303

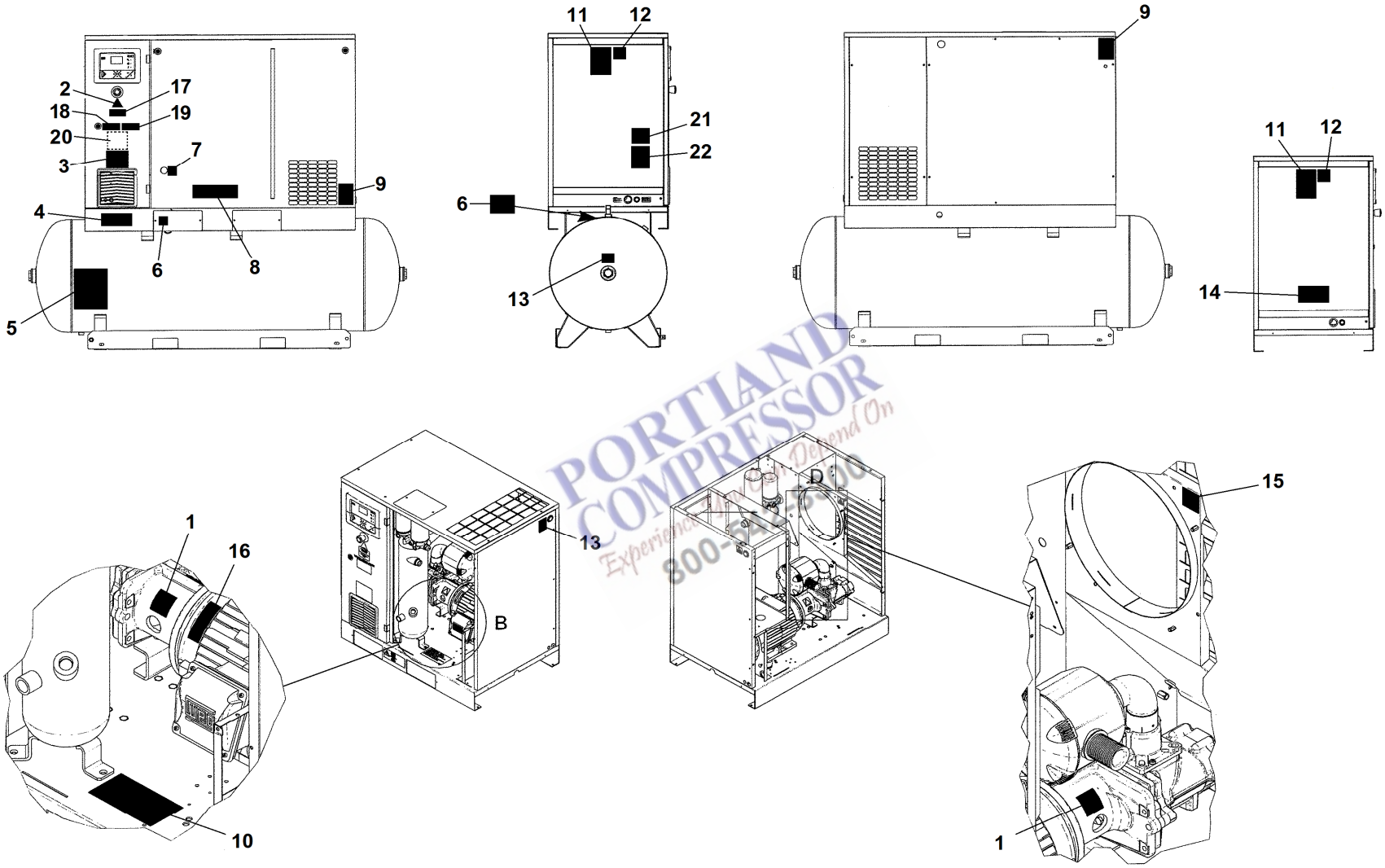

PORTLAND COMPRESSOR
Experience You Can Depend On
800-347-6700

TAV. 22

Q.tà - Q.ty - Q.te - Anz. - Cant.

LABELS

Rif. N. Ref. No Nr. Rèf. Bild Nr. Ref. N.	N. ordinaz. Part. num. Nr. Pièce Teil num. Codigo	HP 10 / Kw 7,5																HP 15 / Kw 11														HP 20 / kW 15														DESCRIPTION
		4152018588	4152018585	4152018594	4152018591	4152018597	4152018600	4152018603	4152018606	4152018982	4152018979							4152018589	4152018586	4152018592	4152018595	4152018598	4152018601	4152018604	4152018607	4152018978	4152018980	4152018983					4152018590	4152018602	4152018587	4152018599	4152018593	4152018605	4152018596	4152018608	4152018981	4152018984				
1	2202260701	1	1	1	1	1	1	1	1	1	1							1	1	1	1	1	1	1	1	1	1	1					1	1	1	1	1	1	1	1	1	1					MOVING PARTS
2	1088100102	1	1	1	1	1	1	1	1	1	1							1	1	1	1	1	1	1	1	1	1	1					1	1	1	1	1	1	1	1	1	1					WARNING LABEL
3	2202260791	1	1	1	1	1	1	1	1	1	1							1	1	1	1	1	1	1	1	1	1	1					1	1	1	1	1	1	1	1	1	1					LABEL AUTOMATIC RESTART
4	2202940400	1	1	1	1	1	1	1	1	1	1							1	1	1	1	1	1	1	1	1	1	1					1	1	1	1	1	1	1	1	1	1					WARNING LABEL VENTILATOR
5	1079993129			1	1			1	1	1	1									1	1			1	1		1	1									1	1	1	1	1	1					WARNING AIR RECEIVER
6	2202260791			1	1			1	1	1	1									1	1			1	1		1	1									1	1	1	1	1	1					LABEL SAFETY VALVE
7	2202251293	1	1	1	1	1	1	1	1	1	1							1	1	1	1	1	1	1	1	1	1	1					1	1	1	1	1	1	1	1	1	1					LABEL OIL LEVEL
8	2204130416	1		1			1		1	1																																				LABEL "CPVSD 10 D"
8	2204130413		1		1	1		1			1																																				LABEL "CPVSD 10"
8	2204130417																	1			1		1		1			1																			LABEL "CPVSD 15 D"
8	2204130414																		1	1		1		1		1	1																				LABEL "CPVSD 15"
8	2204130418																																1	1					1	1		1					LABEL "CPVSD 20 D"
8	2204130415																																		1	1	1	1			1						LABEL "CPVSD 20"
9	2202260791	2	2	2	2	2	2	2	2	2	2							2	2	2	2	2	2	2	2	2	2	2					2	2	2	2	2	2	2	2	2	2					WARNING LABEL
10	2202204289	1	1	1	1	1	1	1	1	1	1							1	1	1	1	1	1	1	1	1	1	1					1	1	1	1	1	1	1	1	1	1					LABEL CONDENSATE DRAIN
11	2204135305	1	1	1	1	1	1	1	1	1	1							1	1	1	1	1	1	1	1	1	1	1					1	1	1	1	1	1	1	1	1	1					LABEL SERVICE
12	2202260622	1	1	1	1	1	1	1	1	1	1							1	1	1	1	1	1	1	1	1	1	1					1	1	1	1	1	1	1	1	1	1					LABEL ATMOSPHERIC EVENTS
13	2202260791	1	1	1	1	1	1	1	1	1	1							1	1	1	1	1	1	1	1	1	1	1					1	1	1	1	1	1	1	1	1	1					LABEL AIR NOT RESPIRABLE
14	2202251312	1	1			1	1											1	1			1	1		1								1	1	1	1										LABEL FORKLIFT
15	2202260791	1	1	1	1	1	1	1	1	1	1							1	1	1	1	1	1	1	1	1	1	1					1	1	1	1	1	1	1	1	1	1					FAN ROTATING
16	2202260791	1	1	1	1	1	1	1	1	1	1							1	1	1	1	1	1	1	1	1	1	1					1	1	1	1	1	1	1	1	1	1					LABEL ROTATION ELECTRIC MOTOR
17	2202261068	1	1	1	1	1	1	1	1	1	1							1	1	1	1	1	1	1	1	1	1	1					1	1	1	1	1	1	1	1	1	1					LABEL "cULus" ENCLOSED
18	2202873100	1	1	1	1	1	1	1	1	1	1							1	1	1	1	1	1	1	1	1	1	1					1	1	1	1	1	1	1	1	1	1					LABEL COMPRESSOR
19	2202873101	1	1	1	1	1	1	1	1	1	1							1	1	1	1	1	1	1	1	1	1	1					1	1	1	1	1	1	1	1	1	1					LABEL DRYER
20	2204129004	1	1	1	1	1	1	1	1	1	1							1	1	1	1	1	1	1	1	1	1	1					1	1	1	1	1	1	1	1	1	1					LABEL FUSES
21	2204128903	1	1	1	1	1	1	1	1	1	1							1	1	1	1	1	1	1	1	1	1	1					1	1	1	1	1	1	1	1	1	1					LABEL ELECTRICAL
22	2203082101	1		1			1		1	1								1			1		1		1			1					1	1					1	1		1					LABEL ELECTRICAL DRYER

PORTLAND COMPRESSOR
Expertise in Air Can Depend On
800-542-8300

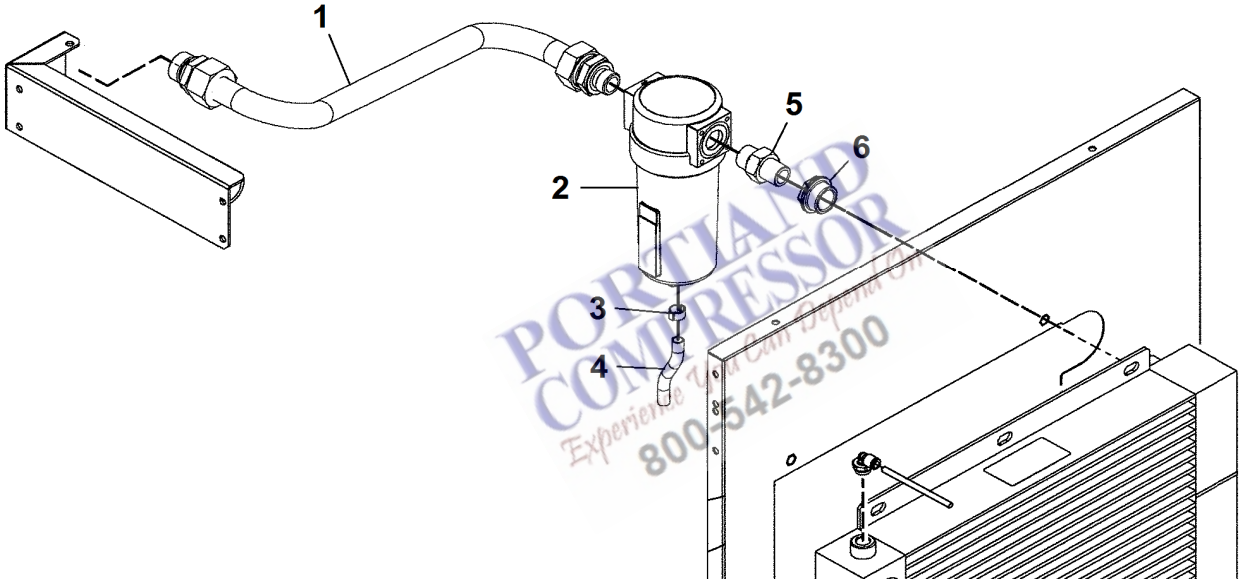

PORTLAND COMPRESSOR
Experience You Can Depend On
800-542-8300

TAV. 23		Q.tà - Q.ty - Q.te - Anz. - Cant.																										Option "WSD" for FM version
		HP 10 / Kw 7,5										HP 15 / Kw 11									HP 20 / kW 15							
Rif. N. Ref. No Nr. Rèf. Bild Nr. Ref. N.	N. ordinaz. Part. num. Nr. Pièce Teil num. Codigo	4152018585	4152018597									4152018586	4152018598								4152018587	4152018599						DESCRIPTION
1	2204 1313 02	1	1									1	1															PIPE AIR DELIVERY
1	2204 1313 01																				1	1						PIPE AIR DELIVERY
2	6221 3535 00	1	1									1	1								1	1						WATER SEPARATOR
3	0347 0104 00	1	1									1	1								1	1						CLAMP HOSE
4	0070 6002 26	X	X									X	X								X	X						PIPE (IN METERS)
5	1503 1225 00	1	1									1	1								1	1						NIPPLE
6	2202 8858 00	1	1									1	1								1	1						REDUCTION

PORTLAND COMPRESSOR
Experience You Can Depend On
800-542-8300

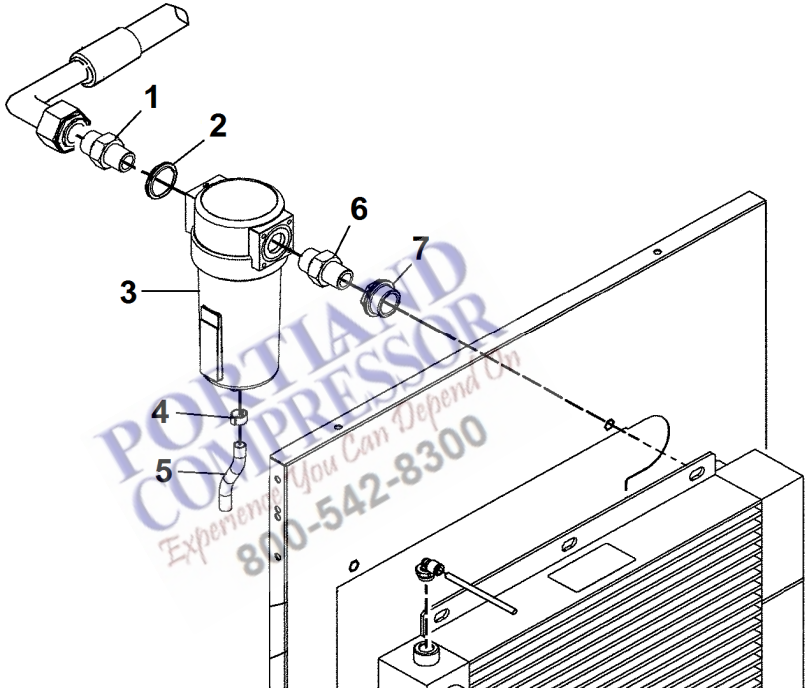

PORTLAND COMPRESSOR
Experience You Can Depend On
800-542-8300

TAV. 24		Q.tà - Q.ty - Q.te - Anz. - Cant.																										Option "WSD" for TM version
		HP 10 / Kw 7,5										HP 15 / Kw 11									HP 20 / kW 15							
Rif. N. Ref. No Nr. Rèf. Bild Nr. Ref. N.	N. ordinaz. Part. num. Nr. Pièce Teil num. Codigo	4152018591	4152018603									4152018592	4152018604								4152018593	4152018605						DESCRIPTION
1	0603 5522 03	1	1									1	1								1	1						NIPPLE
2	0661 1000 39	1	1									1	1								1	1						SEAL WASHER
3	6221 3535 00	1	1									1	1								1	1						WATER SEPARATOR
4	0347 0104 00	1	1									1	1								1	1						CLAMP HOSE
5	0070 6002 26	X	X									X	X								X	X						PIPE (IN METERS)
6	1503 1225 00	1	1									1	1								1	1						NIPPLE
7	2202 8858 00	1	1									1	1								1	1						REDUCTION

PORTLAND COMPRESSOR
Experience You Can Depend On
800-542-8300

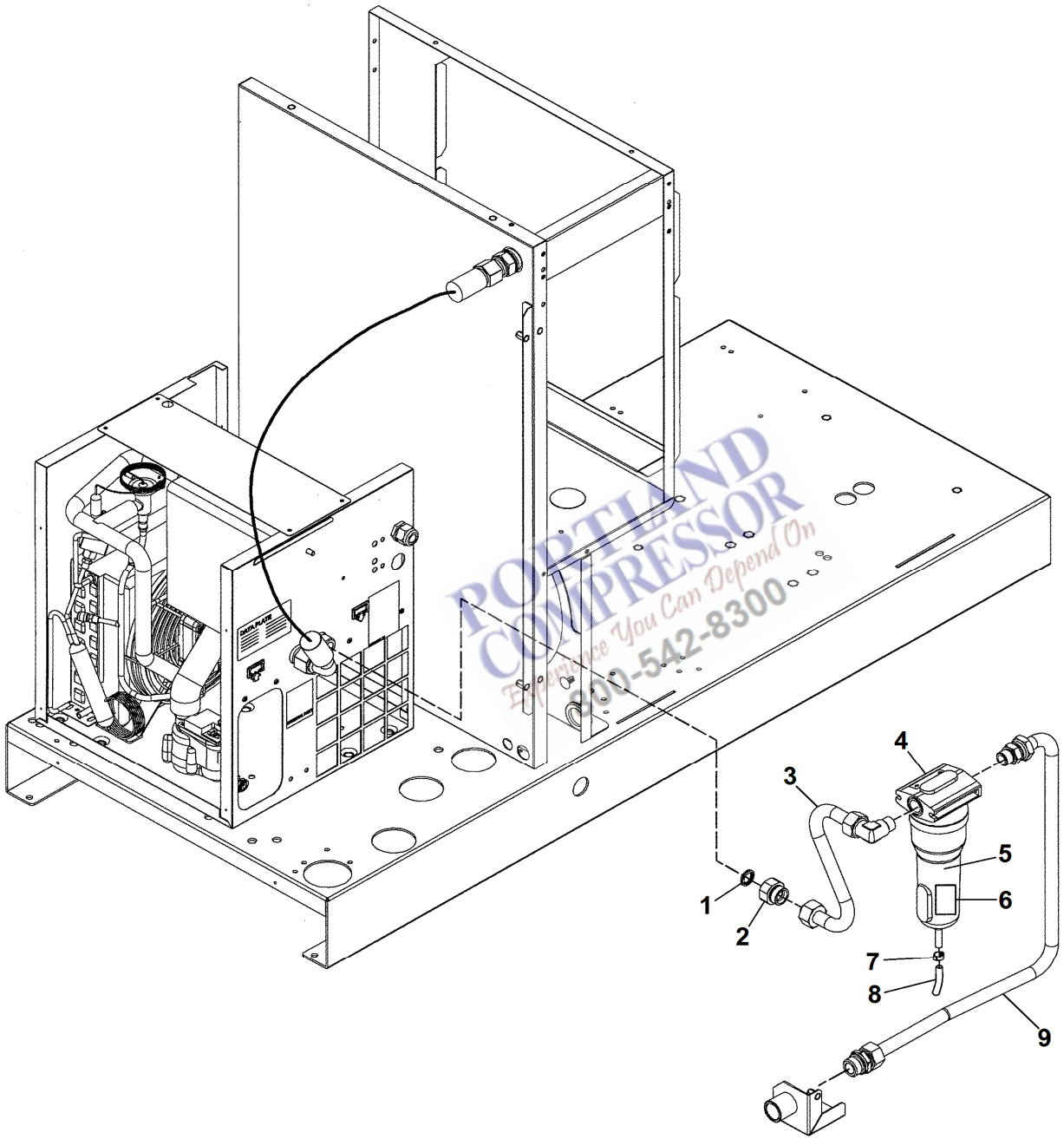

PORTLAND COMPRESSOR
Experience You Can Depend On
800-542-8300

TAV. 25		Q.tà - Q.ty - Q.te - Anz. - Cant.																									Option "FILTER DRYER A4-A4+" for FM version
		HP 10 / Kw 7,5										HP 15 / Kw 11															
Rif. N. Ref. No Nr. Rèf. Bild Nr. Ref. N.	N. ordinaz. Part. num. Nr. Pièce Teil num. Codigo	4152018588	4152018600									4152018589	4152018601														DESCRIPTION
1	0661 1000 40	1	1									1	1														SEAL WASHER
2	2202 9264 00	1	1									1	1														ADAPTER
3	2204 1352 01	1	1									1	1														PIPE
4	8102 8520 38	1	1									1	1														FILTER G 125 (G 1/2) CP LG
5	2258 2931 03	1	1									1	1														FILTER
6	2204 1305 03	1	1									1	1														LABEL
7	0347 0104 00	1	1									1	1														CLAMP
8	0070 6002 26	X	X									X	X														PIPE (IN METERS)
9	2204 1318 00	1	1									1	1														PIPE

PORTLAND COMPRESSOR
Experience You Can Depend On
800-542-8300

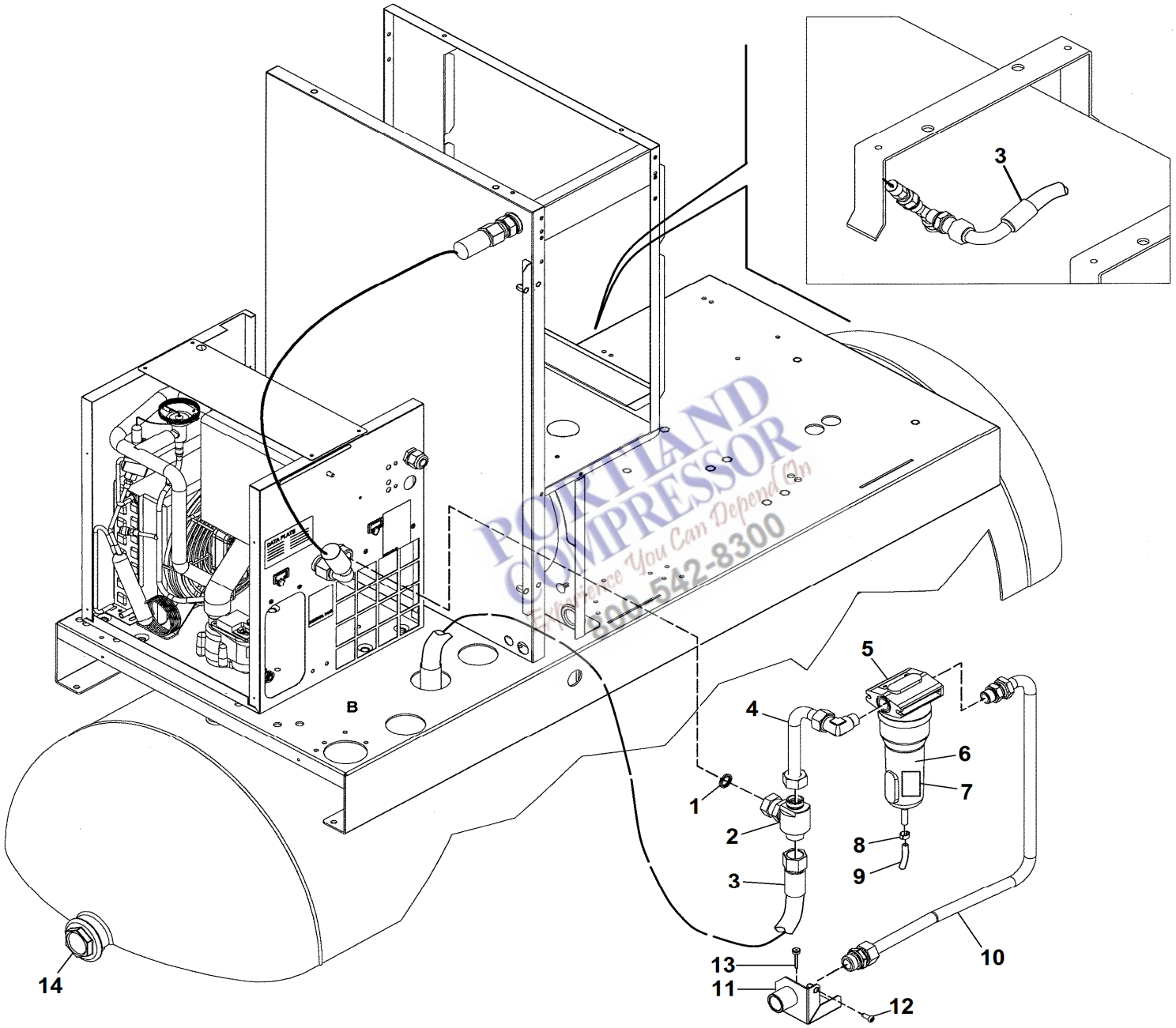

PORTLAND COMPRESSOR
Experience You Can Depend On
800-542-8300

TAV. 26		Q.tà - Q.ty - Q.te - Anz. - Cant.																																Option "FILTER DRYER A4-A4+" for TM version
		HP 10 / Kw 7,5															HP 15 / Kw 11																	
Rif. N. Ref. No Nr. Rèf. Bild Nr. Ref. N.	N. ordinaz. Part. num. Nr. Pièce Teil num. Codigo	4152018594	4152018606														4152018595	4152018607																DESCRIPTION
1	0661 1000 40	1	1														1	1																SEAL WASHER
2	2202 9458 80	1	1														1	1																TEE
3	2202 7685 15	1	1														1	1																FLEXIBLE
4	2204 1319 00	1	1														1	1																PIPE
5	8102 8520 38	1	1														1	1																FILTER G 125 (G 1/2) CP LG
6	2258 2931 03	1	1														1	1																FILTER
7	2204 1305 03	1	1														1	1																LABEL
8	0347 0104 00	1	1														1	1																CLAMP
9	0070 6002 26	X	X														X	X																PIPE (IN METERS)
10	2204 1318 00	1	1														1	1																PIPE
11	2204 1216 00	1	1														1	1																STIRRUP
12	0215 0003 91	1	1														1	1																SCREW
13	0129 3270 38	3	3														3	3																BLIND RIVET
14	2200 7509 11	1	1														1	1																PLUG

PORTLAND COMPRESSOR
Experience You Can Depend On
800-542-8300

TAV. 27

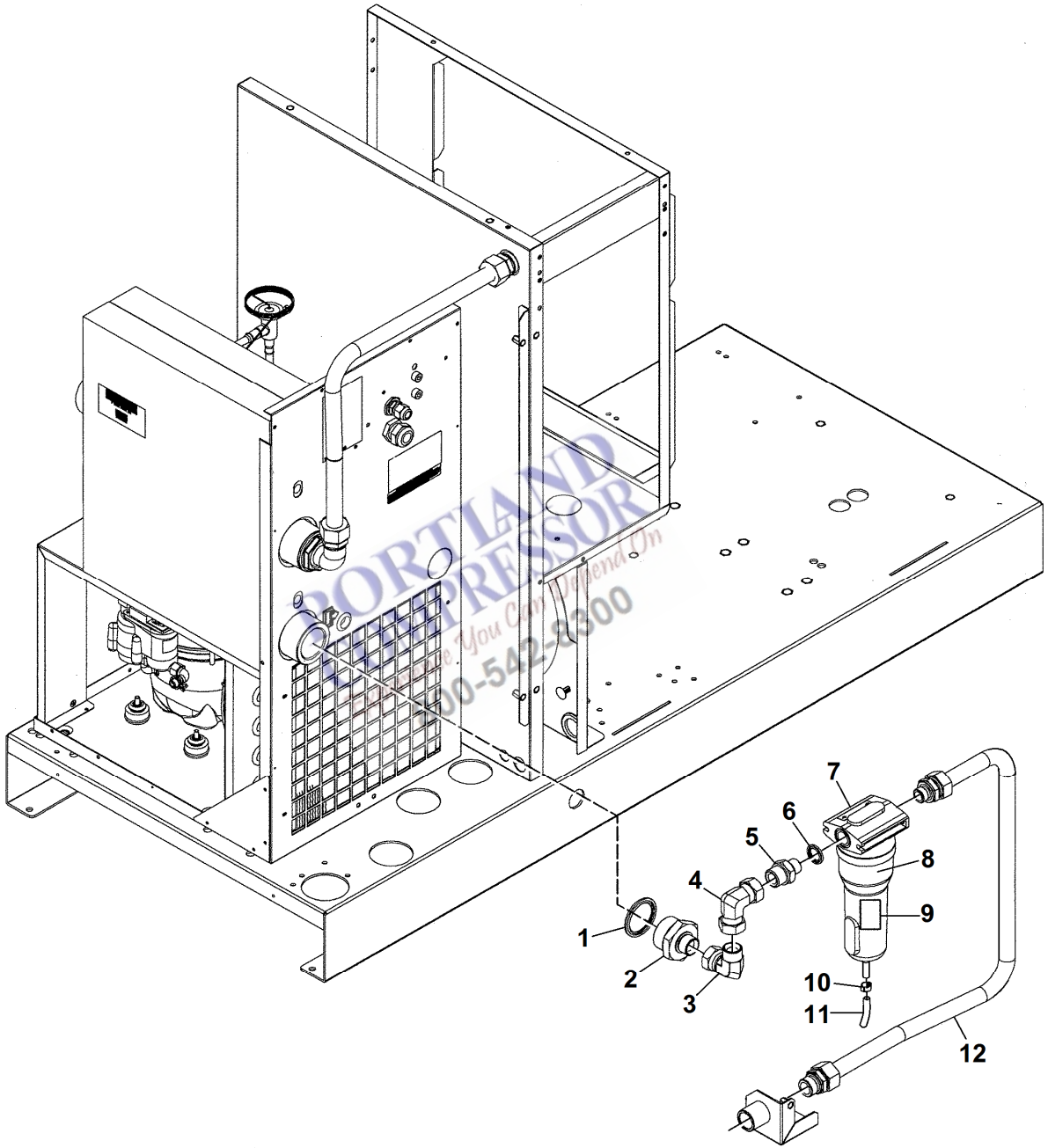

PORTLAND COMPRESSOR
Quality You Can Depend On
800-542-2300

TAV. 27		Q.tà - Q.ty - Q.te - Anz. - Cant.		Option "FILTER DRYER A6/7" for FM version
		HP 20 / kW 15		
Rif. N. Ref. No Nr. Rèf. Bild Nr. Ref. N.	N. ordinaz. Part. num. Nr. Pièce Teil num. Codigo	4152018590	4152018602	DESCRIPTION
1	0661 1000 61	1	1	SEAL WASHER
2	0603 4200 52	1	1	NIPPLE
3	0606 0000 28	1	1	COUPLING
4	0606 0000 61	1	1	COUPLING
5	0603 5522 03	1	1	NIPPLE
6	0661 1000 39	1	1	SEAL WASHER
7	8102 8520 38	1	1	FILTER G 125 (G 1/2) CP LG
8	2258 2931 03	1	1	FILTER
9	2204 1305 03	1	1	LABEL
10	0347 0104 00	1	1	CLAMP
11	0070 6002 26	X	X	PIPE (IN METERS)
12	2204 1070 09	1	1	PIPE

PORTLAND COMPRESSOR
Experience You Can Depend On
800-542-8300

TAV. 27A

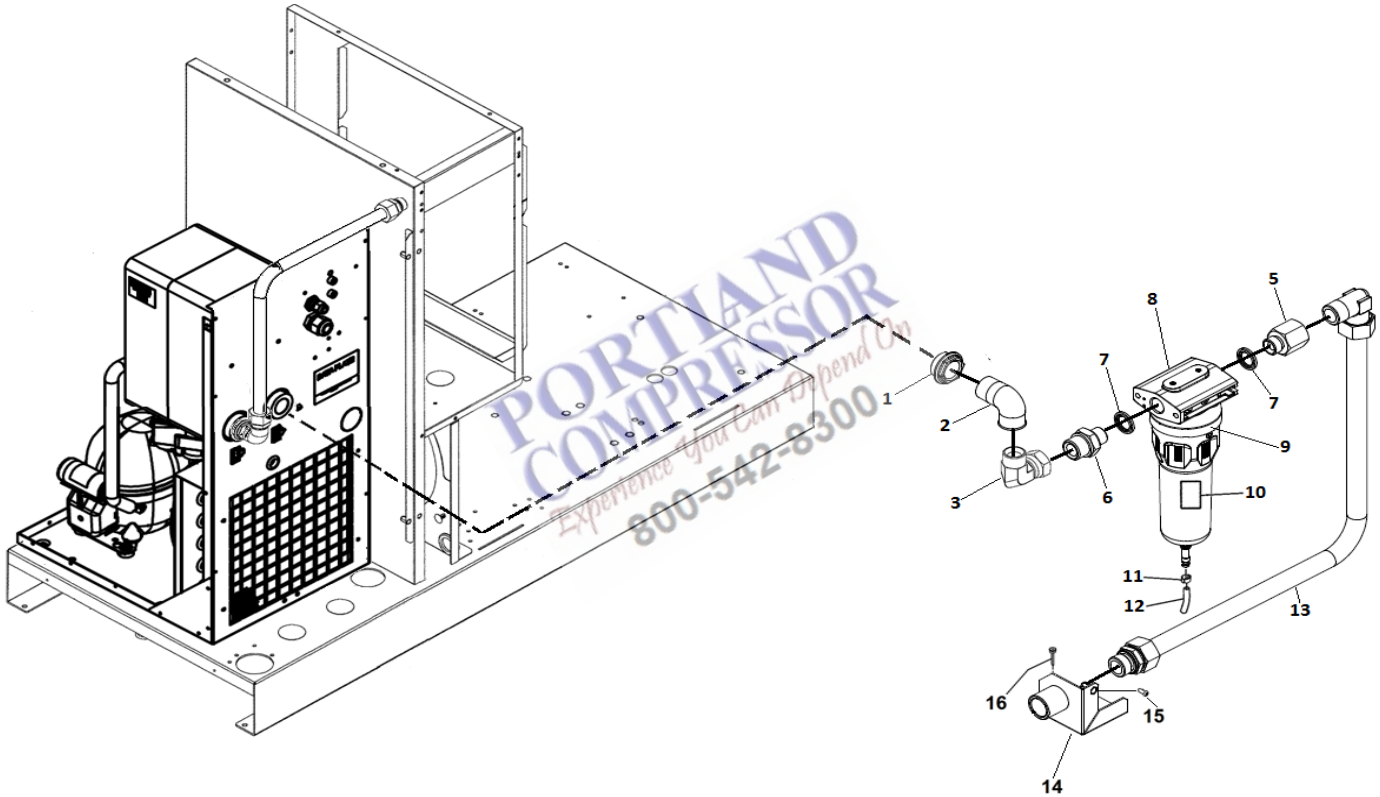

PORTLAND COMPRESSOR
Experience You Can Depend On
800-542-8300

TAV. 27A		Q.tà - Q.ty - Q.te - Anz. - Cant.		Option "FILTER DRYER E6" for FM version
		HP 20 / kW 15		
Rif. N. Ref. No Nr. Rèf. Bild Nr. Ref. N.	N. ordinaz. Part. num. Nr. Pièce Teil num. Codigo	4152018590	4152018602	DESCRIPTION
1	2202 9285 02	1	1	REDUCER
2	0560 1306 03	1	1	ELBOW
3	0606 0000 28	1	1	PIPE COUPLING
5	0606 0000 82	1	1	FITTING PIPE
6	0603 5522 03	1	1	NIPPLE
7	0661 1000 39	2	2	SEAL WASHER
8	8102 8520 38	1	1	FILTER ASSEMBLY 3G
9	2258 2931 03	1	1	FILTER
10	2204 1305 03	1	1	LABEL
11	0347 0104 00	1	1	CLAMP
12	0070 6002 26	X	X	PIPE (IN METERS)
13	2204 1070 09	1	1	PIPE
14	2204 1216 00	1	1	STIRRUP
15	0215 0003 91	1	1	SCREW
16	0129 3270 38	3	3	BLIND RIVET

PORTLAND COMPRESSOR
Experience You Can Depend On
800-542-8300

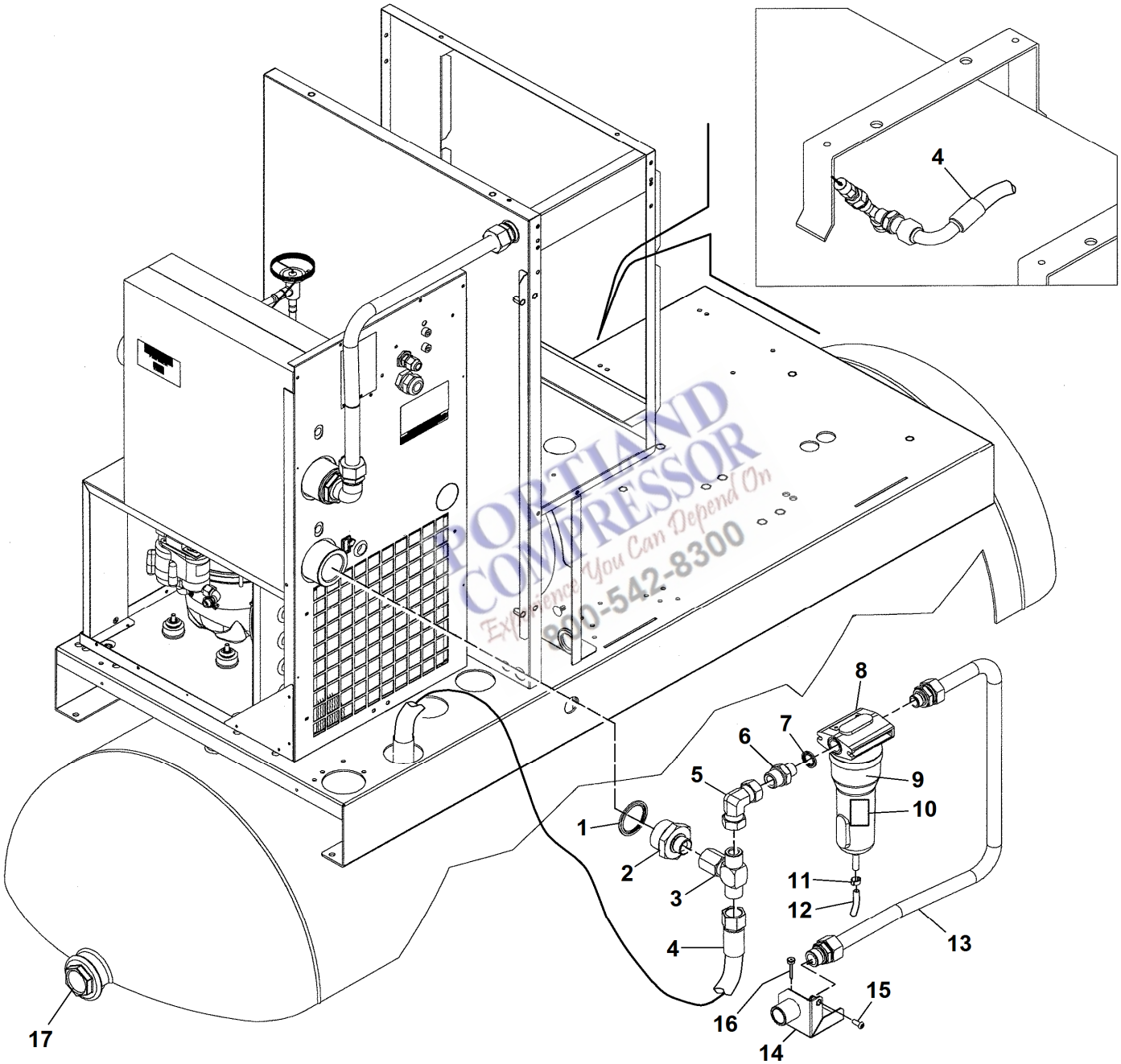

PORTLAND COMPRESSOR
Experience You Can Depend On
800-542-8300

TAV. 28		Q.tà - Q.ty - Q.te - Anz. - Cant.		Option "FILTER DRYER A6/7" for TM version
		HP 20 / kW 15		
Rif. N. Ref. No Nr. Rèf. Bild Nr. Ref. N.	N. ordinaz. Part. num. Nr. Pièce Teil num. Codigo	4152018596	4152018608	DESCRIPTION
1	0661 1000 61	1	1	SEAL WASHER
2	0603 4200 52	1	1	NIPPLE
3	0606 0000 48	1	1	TEE
4	2202 7685 15	1	1	FLEXIBLE
5	0606 0000 61	1	1	COUPLING
6	0603 5522 02	1	1	NIPPLE
7	0661 1000 39	1	1	SEAL WASHER
8	8102 8520 38	1	1	FILTER ASSEMBLY 3G
9	2258 2931 03	1	1	FILTER
10	2204 1305 03	1	1	LABEL
11	0347 0104 00	1	1	CLAMP
12	0070 6002 26	X	X	PIPE (IN METERS)
13	2204 1222 00	1	1	PIPE
14	2204 1216 00	1	1	STIRRUP
15	0215 0003 91	1	1	SCREW
16	0129 3270 38	3	3	BLIND RIVET
17	2200 7509 11	1	1	PLUG

PORTLAND COMPRESSOR
Experience You Can Depend On
800-542-8300

TAV. 28A

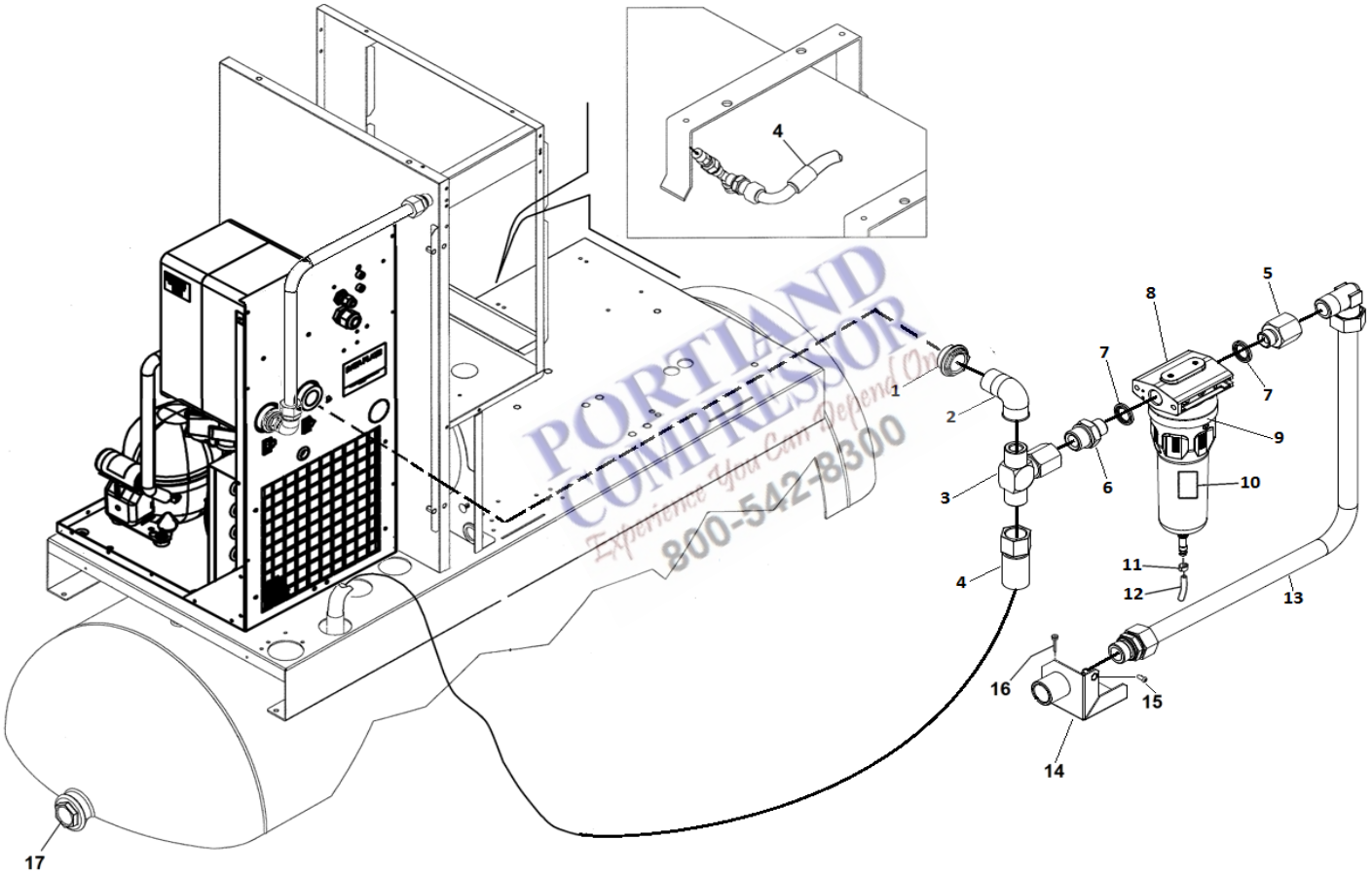

PORTLAND COMPRESSOR
Experience You Can Depend On
800-542-8300

TAV. 28A		Q.tà - Q.ty - Q.te - Anz. - Cant.																												Option "FILTER DRYER E6" for TM version
		HP 20 / kW 15																												
Rif. N. Ref. No Nr. Rèf. Bild Nr. Ref. N.	N. ordinaz. Part. num. Nr. Pièce Teil num. Codigo	4152018596	4152018608																											DESCRIPTION
1	2202 9285 02	1	1																											REDUCER
2	0560 1306 03	1	1																											ELBOW
3	0606 0000 48	1	1																											FITTING TEE
4	2202 7685 15	1	1																											FLEXIBLE
5	0606 0000 82	1	1																											FITTING PIPE
6	0603 5522 03	1	1																											NIPPLE
7	0661 1000 39	2	2																											SEAL WASHER
8	8102 8520 38	1	1																											FILTER ASSEMBLY 3G
9	2258 2931 03	1	1																											FILTER
10	2204 1305 03	1	1																											LABEL
11	0347 0104 00	1	1																											CLAMP
12	0070 6002 26	X	X																											PIPE (IN METERS)
13	2204 1070 09	1	1																											PIPE
14	2204 1216 00	1	1																											STIRRUP
15	0215 0003 91	1	1																											SCREW
16	0129 3270 38	3	3																											BLIND RIVET
17	2200 7509 11	1	1																											PLUG

PORTLAND COMPRESSOR
Experience You Can Depend On
800-542-8300

TAV. 29

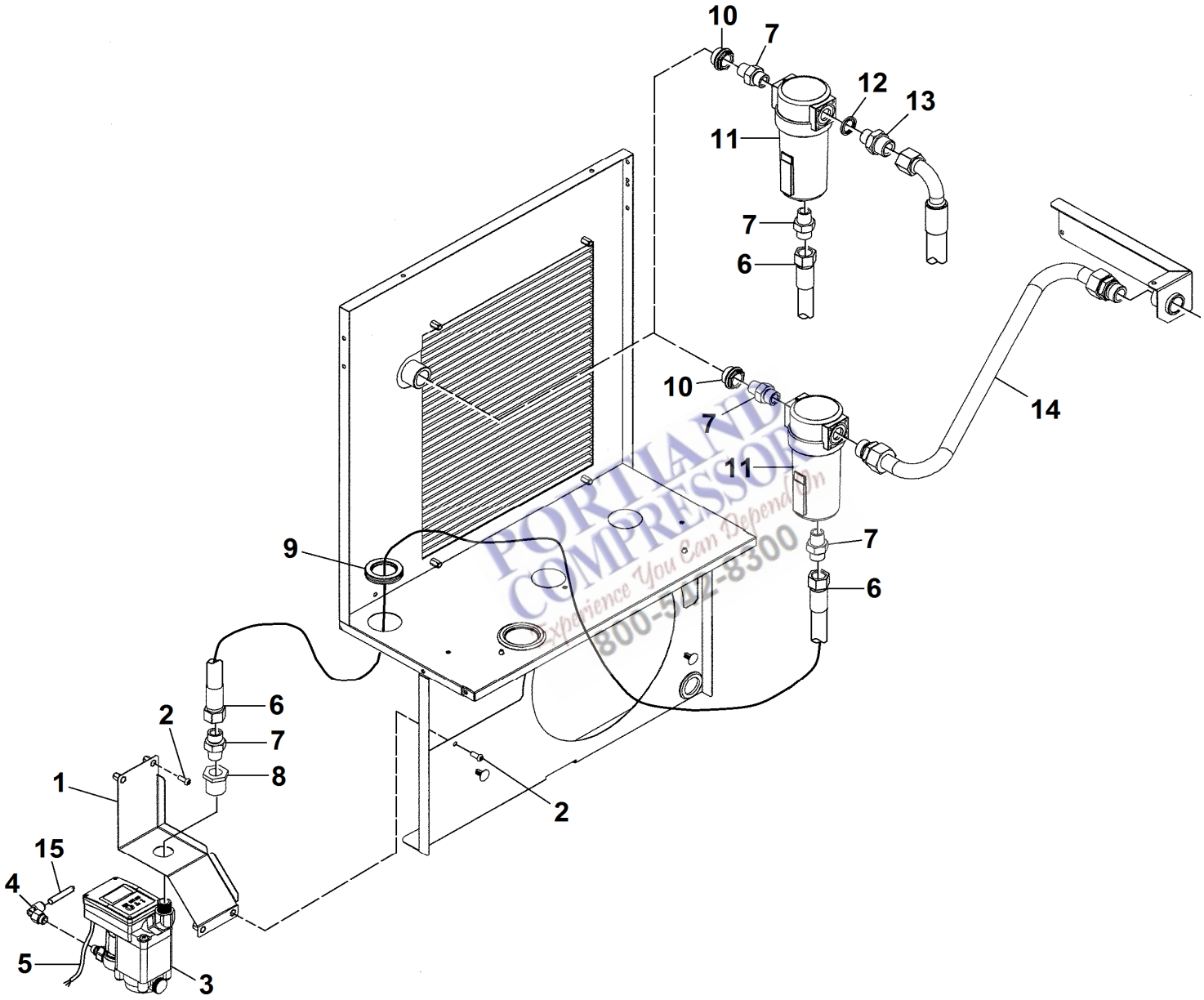

PORTLAND COMPRESSOR
Experience You Can Depend On
800-342-8300

TAV. 29		Q.tà - Q.ty - Q.te - Anz. - Cant.																												Option "ZERO LOSS DRAIN FOR WSD"
		HP 10 / Kw 7,5												HP 15 / Kw 11												HP 20 / kW 15								
Rif. N. Ref. No Nr. Rèf. Bild Nr. Ref. N.	N. ordinaz. Part. num. Nr. Pièce Teil num. Codigo	4152018588	4152018594	4152018600	4152018606	4152018585	4152018597	4152018591	4152018603					4152018589	4152018595	4152018601	4152018607	4152018586	4152018598	4152018592	4152018604					4152018590	4152018596	4152018602	4152018608	4152018587	4152018599	4152018593	4152018605		DESCRIPTION
1	2204 1223 00	1	1	1	1	1	1	1	1					1	1	1	1	1	1	1	1					1	1	1	1	1	1	1	1		STIRRUP
2	0215 0003 91	4	4	4	4	4	4	4	4					4	4	4	4	4	4	4	4					4	4	4	4	4	4	4	4		SCREW
3	2202 8159 05	1	1	1	1	1	1	1	1					1	1	1	1	1	1	1	1					1	1	1	1	1	1	1	1		ELECTRICAL DRAIN
4	2204 1359 80	1	1	1	1	1	1	1	1					1	1	1	1	1	1	1	1					1	1	1	1	1	1	1	1		KIT ELBOW DRAIN
5	2205 0308 11	1	1	1	1	1	1	1	1					1	1	1	1	1	1	1	1					1	1	1	1	1	1	1	1		WIRE H. OPTION
6	2202 7685 19	1	1	1	1	1	1	1	1					1	1	1	1	1	1	1	1														FLEXIBLE
6	2202 7685 18																									1	1	1	1	1	1	1	1		FLEXIBLE
7	1503 1225 00	2	2	2	2	3	3	3	3					2	2	2	2	3	3	3	3					2	2	2	2	3	3	3	3		NIPPLE
8	0570 7017 32	1	1	1	1	1	1	1	1					1	1	1	1	1	1	1	1					1	1	1	1	1	1	1	1		COUPLING
9	1088 0803 07	1	1	1	1	1	1	1	1					1	1	1	1	1	1	1	1					1	1	1	1	1	1	1	1		GROMMET
10	2202 8858 00					1	1	1	1									1	1	1	1									1	1	1	1		REDUCTION
11	6221 3535 00					1	1	1	1									1	1	1	1									1	1	1	1		WATER SEPARATOR
12	0661 1000 39					1	1	1	1									1	1	1	1									1	1	1	1		SEAL WASHER
13	0603 5522 03					1	1	1	1									1	1	1	1									1	1	1	1		NIPPLE
14	2204 1313 02					1	1											1	1																PIPE AIR
14	2204 1313 01																													1	1				PIPE AIR
15	0070 7250 07	X	X	X	X	X	X	X	X					X	X	X	X	X	X	X	X					X	X	X	X	X	X	X	X		PIPE (IN METERS)

PORTLAND COMPRESSOR
Experience You Can Depend On
800-542-8300

HP 10 - 15 - 20
kW 7,5 - 11 - 15

COMPRESSORI INDUSTRIALI - *INDUSTRIAL COMPRESSORS* - COMPRESSEURS INDUSTRIELS - *INDUSTRIELLE KOMPRESSOREN* - COMPRESOR INDUSTRIAL

CPVSD - CPVSD D ***120 Gal. (ASME)***				
Codice / Code / Code / Kode / Codigo	HP - *kW*	bar *psi*	V Compressore Compressor Compresseur Kompressor Compresor	V Essiccatore Dryer Sécheur Trockner Secador
4152018662	10-7,5	12,5	208-230/3/60	
4152018663	15-11	12,5	208-230/3/60	
4152018664	20-15	12,5	208-230/3/60	
4152018985	10-7,5	12,5	208-230/3/60	
4152018665	10-7,5	12,5	208-230/3/60	115/1/60
4152018666	15-11	12,5	208-230/3/60	115/1/60
4152018667	20-15	12,5	208-230/3/60	115/1/60
4152018986	15-11	12,5	208-230/3/60	115/1/60

CPVSD - CPVSD D ***120 Gal. (ASME-CNR)***				
Codice / Code / Code / Kode / Codigo	HP - *kW*	bar *psi*	V Compressore Compressor Compresseur Kompressor Compresor	V Essiccatore Dryer Sécheur Trockner Secador
4152018668	10-7,5	12,5	208-230/3/60	
4152018669	15-11	12,5	208-230/3/60	
4152018670	20-15	12,5	208-230/3/60	
4152018671	10-7,5	12,5	208-230/3/60	115/1/60
4152018672	15-11	12,5	208-230/3/60	115/1/60
4152018673	20-15	12,5	208-230/3/60	115/1/60

PORTLAND COMPRESSOR
Experience You Can Depend On
800-542-8300

N. TAV. DWG. NR. N° TABLE Nr. GRUPPENSATZ N. TAB.	**INDEX**
	DESCRIPTION
30	Air receiver 500 L. (TM version with transformer)
31	Air receiver 500 L. (TM FF version with transformer)
32	Casing - Sound-damping panels (TM version with transformer)
33	Casing - Sound-damping panels (TM FF version with transformer)
34	Transformer
35	Option "FILTER DRYER A4-A4+" for TM FF version with transformer
36	Option "FILTER DRYER A6/7" for TM FF version with transformer
36A	Option "FILTER DRYER E6" for TM FF version with transformer
37	Service kits

PORTLAND COMPRESSOR
Experience You Can Depend On
800-542-8300

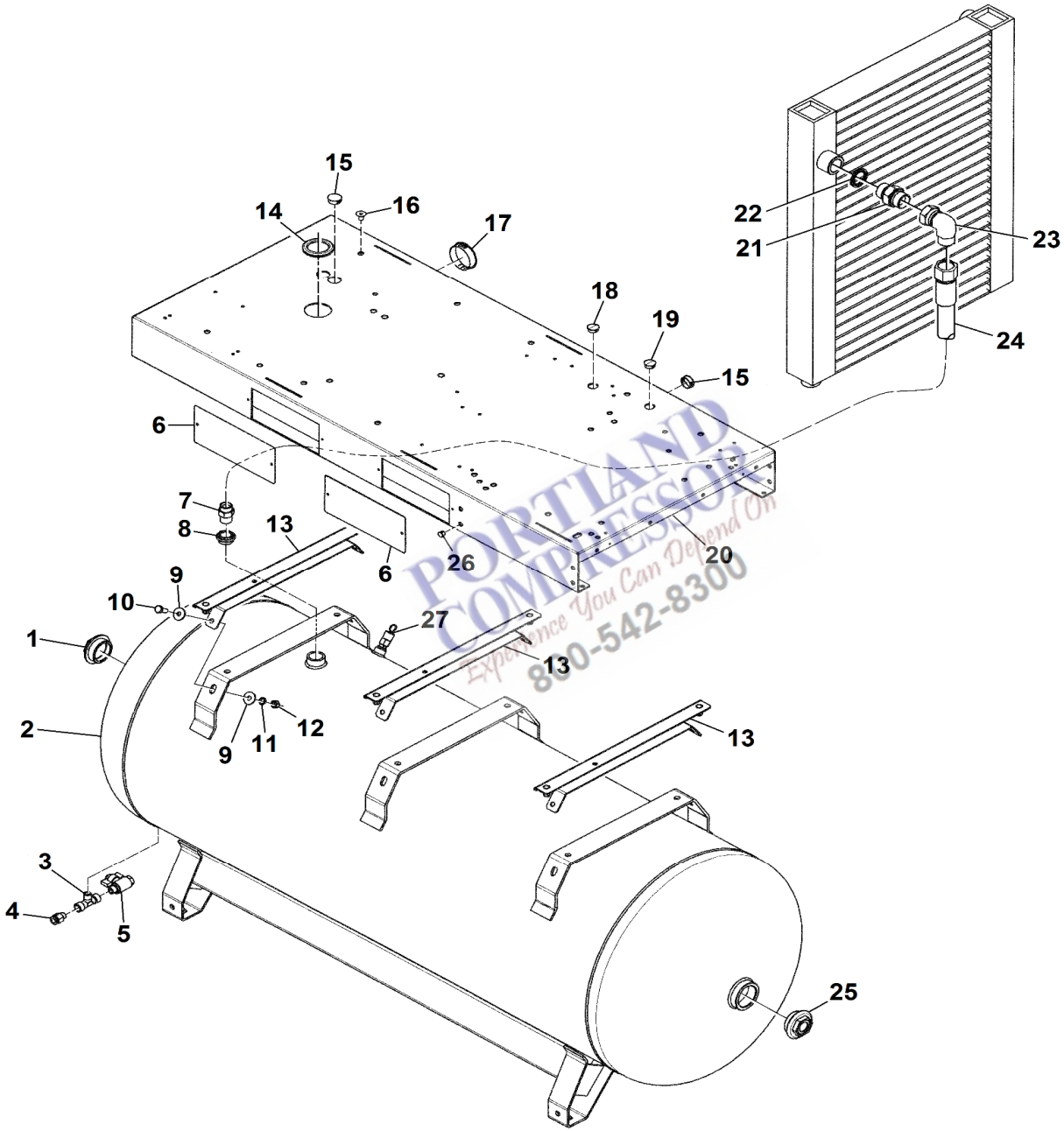

PORTLAND COMPRESSOR
Experience You Can Depend On
800-542-8300

TAV. 30

Air receiver 500 L. (TM version with transformer)

Q.tà - Q.ty - Q.te - Anz. - Cant.

Rif. N. Ref. No Nr. Rèf. Bild Nr. Ref. N.	N. ordinaz. Part. num. Nr. Pièce Teil num. Codigo	HP 10 / Kw 7,5			HP 15 / Kw 11			HP 20 / Kw 15			DESCRIPTION
		4152018662	4152018668	4152018985	4152018663	4152018669		4152018664	4152018670		
1	2200 7509 11	1	1	1	1	1		1	1		PLUG
2	2202 9783 63	1	1	1	1	1		1	1		AIR TANK
3	9740 2027 33	1	1	1	1	1		1	1		TEE
4	0583 8100 89	1	1	1	1	1		1	1		STARIGHT
5	0852 0010 09	1	1	1	1	1		1	1		VALVE
6	2202 8685 26	1	1	1	1	1		1	1		PANEL KIT
7	0571 0035 52	1	1	1	1	1		1	1		NIPPLE
8	2202 9285 02	1	1	1	1	1		1	1		REDUCER
9	0300 0274 17	12	12	12	12	12		12	12		PLAIN WASHER
10	0147 1362 03	6	6	6	6	6		6	6		SCREW
11	0333 4232 00	6	6	6	6	6		6	6		LOCK WASHER
12	0266 2111 00	6	6	6	6	6		6	6		NUT
13	2202 9520 00	3	3	3	3	3		3	3		STIRRUP
14	1088 0803 08	1	1	1	1	1		1	1		GROMMET
15	0697 9810 91	2	2	2	2	2		2	2		PLUG
16	0216 1957 73	5	5	5	5	5		5	5		SCREW
17	0686 9252 95	1	1	1	1	1		1	1		PLUG
18	0686 9253 26	1	1	1	1	1		1	1		PLUG
19	0686 9253 26	1	1	1	1	1		1	1		PLUG
20	2204 1576 16	1	1	1	1	1		1	1		FRAME
21	0603 4243 02	1	1	1	1	1		1	1		NIPPLE
22	0661 1000 43	1	1	1	1	1		1	1		WASHER
23	0606 0000 28	1	1	1	1	1		1	1		ELBOW
24	2202 8681 27	1	1	1	1	1		1	1		HOSE
25	2202 9285 01	1	1	1	1	1		1	1		REDUCER
26	0686 9253 56	8	8	8	8	8		8	8		PLUG
27	0830 1009 67	1	1	1	1	1		1	1		SAFETY VALVE

PORTLAND COMPRESSOR
Experience You Can Depend On
800-542-8300

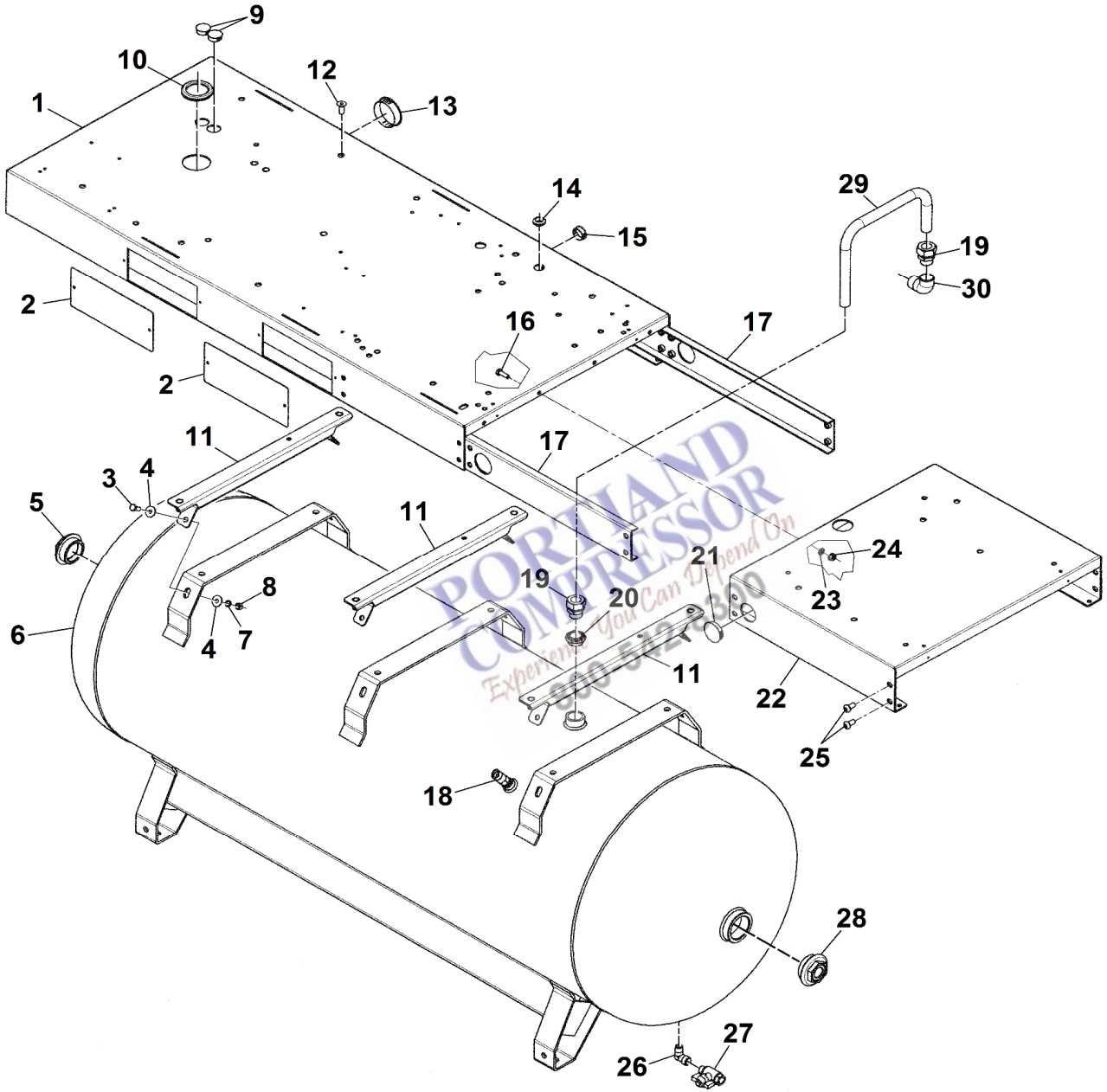

PORTLAND COMPRESSOR
Experience You Can Depend On
800-502-3100

TAV. 31

Air receiver 500 L. (TM FF version with transformer)

Q.tà - Q.ty - Q.te - Anz. - Cant.

Rif. N. Ref. No Nr. Rèf. Bild Nr. Ref. N.	N. ordinaz. Part. num. Nr. Pièce Teil num. Codigo	HP 10 / Kw 7,5		HP 15 / Kw 11			HP 20 / Kw 15		DESCRIPTION
		4152018665	4152018671	4152018666	4152018672	4152018986	4152018667	4152018673	
1	2204 1576 16	1	1	1	1	1	1	1	FRAME
2	2202 8685 26	1	1	1	1	1	1	1	PANEL KIT
3	0147 1362 03	6	6	6	6	6	6	6	SCREW
4	0300 0274 17	12	12	12	12	12	12	12	PLAIN WASHER
5	2200 7509 11	1	1	1	1	1	1	1	PLUG
6	2202 9783 63	1	1	1	1	1	1	1	AIR TANK
7	0333 4232 00	6	6	6	6	6	6	6	LOCK WASHER
8	0266 2111 00	6	6	6	6	6	6	6	NUT
9	0697 9810 91	2	2	2	2	2	2	2	PLUG
10	1088 0803 08	1	1	1	1	1	1	1	GROMMET
11	2202 9520 00	3	3	3	3	3	3	3	STIRRUP
12	0216 1957 73	5	5	5	5	5	5	5	SCREW
13	0686 9252 95	1	1	1	1	1	1	1	PLUG
14	0989 4220 08	1	1	1	1	1	1	1	GROMMET
15	0697 9810 91	1	1	1	1	1	1	1	PLUG
16	0147 1325 03	4	4	4	4	4	4	4	SCREW
17	2204 1584 16	2	2	2	2	2	2	2	STIRRUP
18	0830 1009 67	1	1	1	1	1	1	1	SAFETY VALVE
19	0580 0015 15	2	2	2	2	2	2	2	FITTING
20	2202 9285 02	1	1	1	1	1	1	1	REDUCER
21	0686 9253 36	1	1	1	1	1	1	1	PLUG
22	2204 1577 16	1	1	1	1	1	1	1	FRAME
23	0301 2335 00	4	4	4	4	4	4	4	PLAIN WASHER
24	0291 1185 30	4	4	4	4	4	4	4	NUT
25	0215 0010 85	16	16	16	16	16	16	16	SCREW
26	0605 9500 42	1	1	1	1	1	1	1	ELBOW FITTING
27	0852 0010 09	1	1	1	1	1	1	1	VALVE
28	2202 9285 01	1	1	1	1	1	1	1	REDUCER
29	2204 1591 00	1	1	1	1	1	1	1	PIPE
30	0560 1306 03	1	1	1	1	1	1	1	FITTING

PORTLAND COMPRESSOR
Experience You Can Depend On
800-542-8300

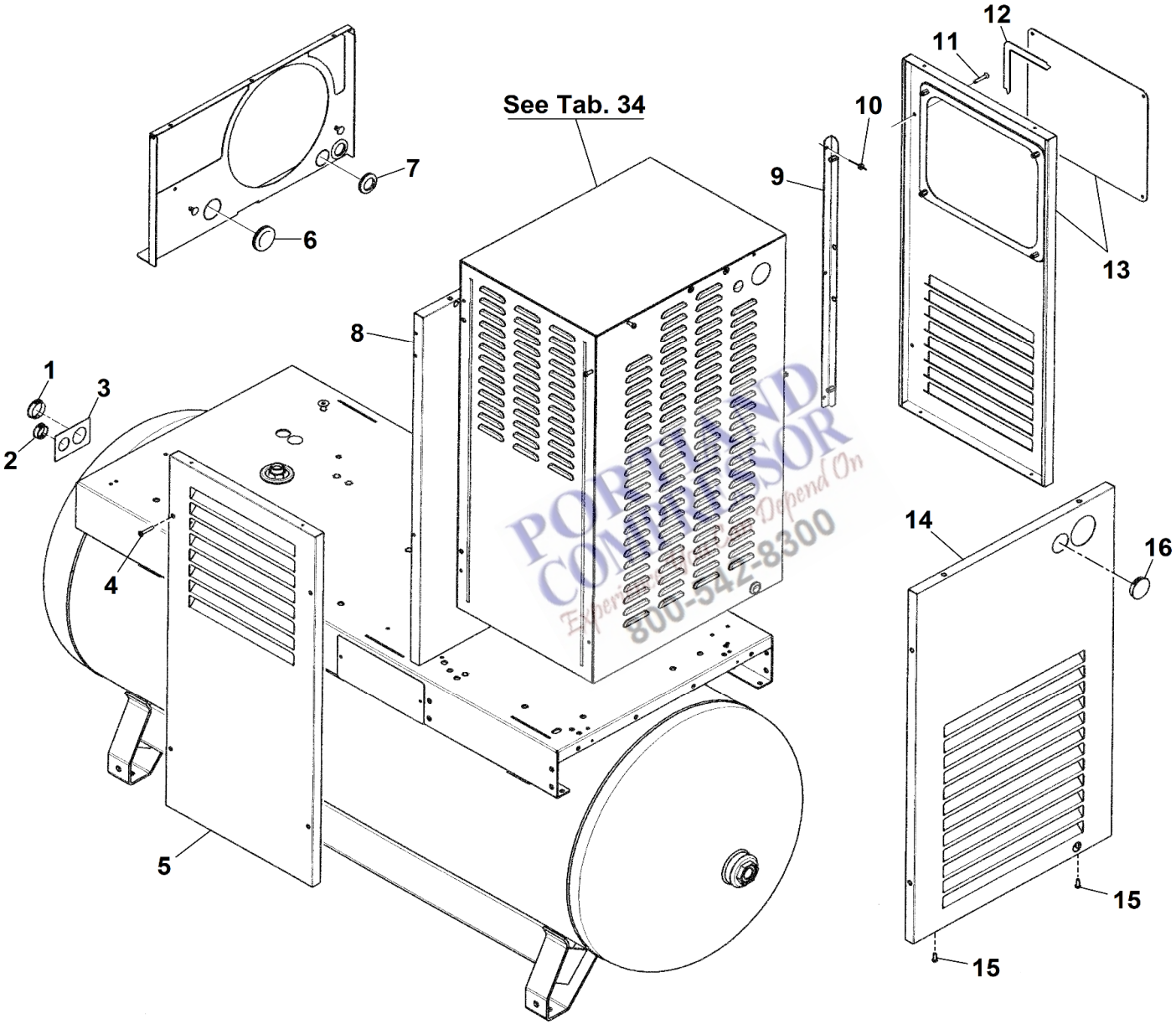

PORTLAND COMPRESSOR
Experience You Can Depend On
800-542-8300

TAV. 32

Casing - Sound-damping panels (TM version with transformer)

Q.tà - Q.ty - Q.te - Anz. - Cant.

Rif. N. Ref. No Nr. Rèf. Bild Nr. Ref. N.	N. ordinaz. Part. num. Nr. Pièce Teil num. Codigo	HP 10 / Kw 7,5			HP 15 / Kw 11			HP 20 / Kw 15			DESCRIPTION
		4152018662	4152018668	4152018985	4152018663	4152018669		4152018664	4152018670		
1	0686 9252 66	1	1	1	1	1		1	1		PLUG
2	0697 9810 87	1	1	1	1	1		1	1		PLUG
3	2204 1596 00	1	1	1	1	1		1	1		PLATE
4	0216 1957 70	4	4	4	4	4		4	4		SCREW
5	2204 1582 17	1	1	1	1	1		1	1		PANEL
6	1088 0803 07	1	1	1	1	1		1	1		GROMMET
7	0989 4220 19	1	1	1	1	1		1	1		GROMMET
8	2204 1578 17	1	1	1	1	1		1	1		PANEL
9	2204 1126 16	1	1	1	1	1		1	1		L PROFILE
10	0129 3270 38	3	3	3	3	3		3	3		RIVET
11	0216 1957 70	4	4	4	4	4		4	4		SCREW
12		X	X	X	X	X		X	X		SEAL
13	2204 1594 17	1	1	1	1	1		1	1		PANEL
14	2204 1580 17	1	1	1	1	1		1	1		PANEL
15	0215 0003 91	2	2	2	2	2		2	2		SCREW
16	0686 9253 36	1	1	1	1	1		1	1		PLUG

PORTLAND COMPRESSOR
Experience You Can Depend On
800-542-8300

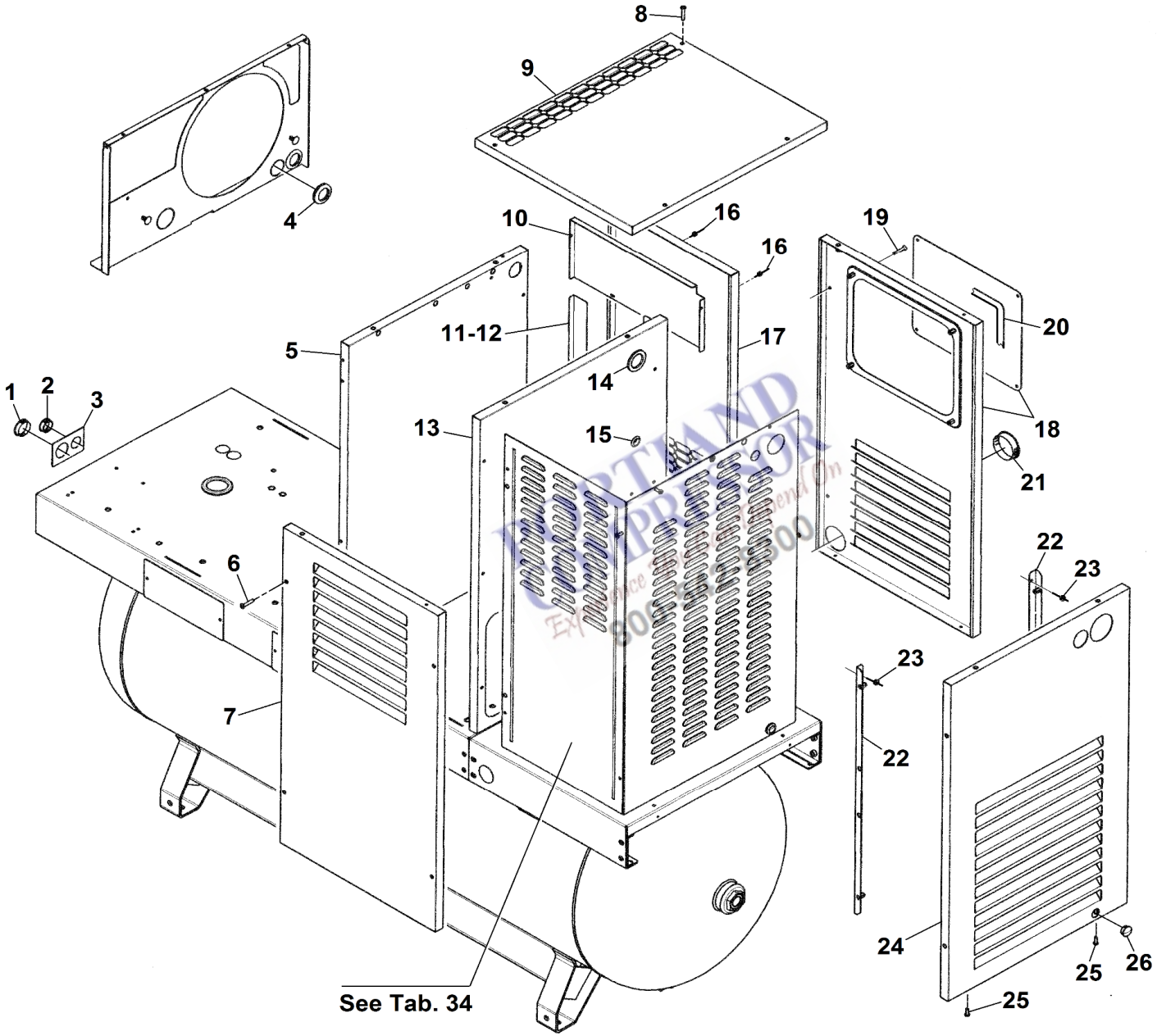
8
9
4
10
16
16
19
20
11-12
17
5
14
1
2
3
13
15
18
21
22
23
6
23
7
22
24
25
26
25
See Tab. 34

TAV. 32

Casing - Sound-damping panels (TM FF version with transformer)

Q.tà - Q.ty - Q.te - Anz. - Cant.

Rif. N. Ref. No Nr. Rèf. Bild Nr. Ref. N.	N. ordinaz. Part. num. Nr. Pièce Teil num. Codigo	HP 10 / Kw 7,5		HP 15 / Kw 11			HP 20 / Kw 15		DESCRIPTION
		4152018665	4152018671	4152018666	4152018672	4152018986	4152018667	4152018673	
1	0686 9252 66	1	1	1	1	1	1	1	PLUG
2	0697 9810 87	1	1	1	1	1	1	1	PLUG
3	2204 1596 00	1	1	1	1	1	1	1	PLATE
4	0989 4220 19	1	1	1	1	1	1	1	GROMMET
5	2204 1578 17	1	1	1	1	1	1	1	PANEL
6	0216 1957 70	4	4	4	4	4	4	4	SCREW
7	2204 1581 17	1	1	1	1	1	1	1	PANEL
8	0216 1957 70	4	4	4	4	4	4	4	SCREW
9	2204 1583 16	1	1	1	1	1	1	1	PANEL
10	2204 1641 16						1	1	PANEL
11	2204 1642 16						1	1	PANEL
12	2200 7199 53						2	2	SCREW
13	2204 1579 17	1	1	1	1	1	1	1	PANEL
14	1088 0803 07	1	1	1	1	1	1	1	GROMMET
15	0989 4220 08	1	1	1	1	1	1	1	GROMMET
16	0129 3270 42						2	2	RIVET
17	2204 1124 17	1	1	1	1	1	1	1	PANEL
18	2204 1593 17	1	1	1	1	1	1	1	PANEL
19	0216 1957 70	4	4	4	4	4	4	4	SCREW
20		X	X	X	X	X	X	X	SEAL
21	0686 9252 95	2	2	2	2	2	2	2	PLUG
22	2204 1126 16	2	2	2	2	2	2	2	L PROFILE
23	0129 3270 38	6	6	6	6	6	6	6	RIVET
24	2204 1580 17	1	1	1	1	1	1	1	PANEL
25	0215 0003 91	2	2	2	2	2	2	2	SCREW
26	0686 9253 26	1	1	1	1	1	1	1	PLUG

PORTLAND COMPRESSOR
Experience You Can Depend On
800-542-8300

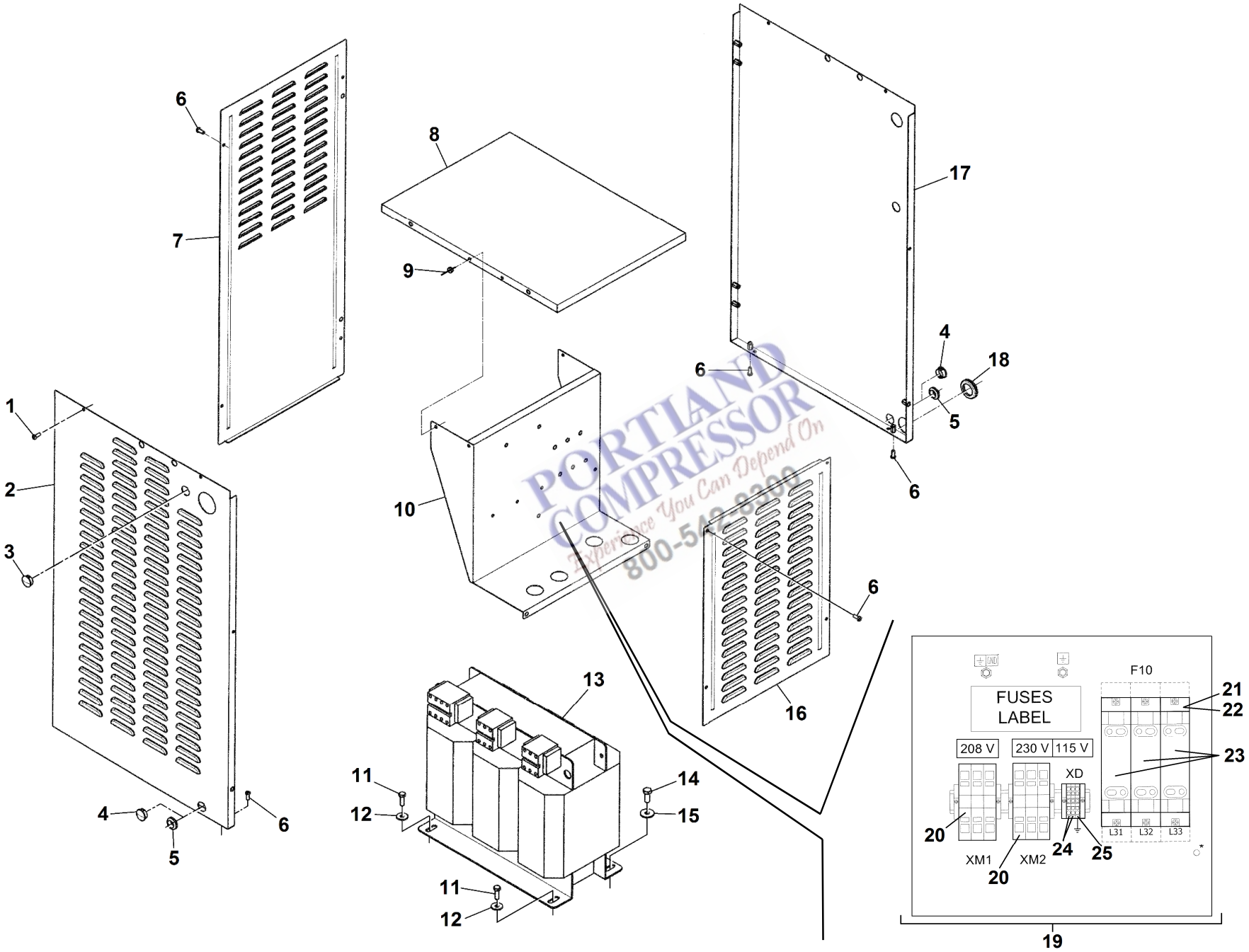

PORTLAND COMPRESSOR
Experience You Can Depend On
800-542-6399

TAV. 34

Rif. N. Ref. No Nr. Rèf. Bild Nr. Ref. N.	N. ordinaz. Part. num. Nr. Pièce Teil num. Codigo	Transformer Q.tà - Q.ty - Q.te - Anz. - Cant. HP 10 / Kw 7,5					HP 15 / Kw 11					HP 20 / Kw 15					DESCRIPTION
		4152018662	4152018668	4152018665	4152018671	4152018985	4152018663	4152018669	4152018666	4152018672	4152018986	4152018664	4152018670	4152018667	4152018673		
1	0215 0003 91	4	4	4	4	4	4	4	4	4	4	4	4	4	4		SCREW
2	2204 1588 16	1	1	1	1	1	1	1	1	1	1	1	1	1	1		PANEL
3	0686 9253 26	1	1			1	1	1				1	1				PLUG
4	0686 9253 26			2	2				2	2	2			2	2		PLUG
5	0989 4220 08	2	2			2	2	2				2	2				GROMMET
6	0215 0003 91	12	12	12	12	12	12	12	12	12	12	12	12	12	12		SCREW
7	2204 1589 16	1	1			1	1	1				1	1				PANEL
8	2204 1586 16	1	1	1	1	1	1	1	1	1	1	1	1	1	1		COVER
9	0129 3270 38	4	4	4	4	4	4	4	4	4	4	4	4	4	4		RIVET
10	2204 1590 16	1	1	1	1	1	1	1	1	1	1	1	1	1	1		STIRRUP
11	0147 1325 03	2	2	2	2	2	2	2	2	2	2	2	2	2	2		SCREW
12	0300 8019 00	2	2	2	2	2	2	2	2	2	2	2	2	2	2		PLAIN WASHER
13	2204 1592 01	1	1	1	1	1	1	1	1	1	1	1	1	1	1		AUTOTRANSFORMER
14	0147 1362 03	1	1	1	1	1	1	1	1	1	1	1	1	1	1		SCREW
15	0300 0274 17	1	1	1	1	1	1	1	1	1	1	1	1	1	1		PLAIN WASHER
16	2204 1595 16	1	1	1	1	1	1	1	1	1	1	1	1	1	1		PANEL
17	2204 1587 16	1	1	1	1	1	1	1	1	1	1	1	1	1	1		PANEL
18	0989 4220 19	1	1	1	1	1	1	1	1	1	1	1	1	1	1		GROMMET
19	2205 0314 41	1	1			1											CUBICLE FOR AUTOTRANSFORMER
19	2205 0314 42			1	1												CUBICLE FOR AUTOTRANSFORMER
19	2205 0314 43						1	1				1	1				CUBICLE FOR AUTOTRANSFORMER
19	2205 0314 44								1	1	1			1	1		CUBICLE FOR AUTOTRANSFORMER
20	1088 0039 33	6	6	6	6	6	6	6	6	6	6	6	6	6	6		POWER SUPPLY TERMINAL
21	1089 9536 90	3	3	3	3	3	3	3	3	3	3	3	3	3	3		FUSE HOLDER
22	1089 0591 52	3	3	3	3	3	3	3	3	3	3	3	3	3	3		FUSE COVER
23	1089 9037 39	3	3	3	3	3											FUSE
23	1089 9528 07						3	3	3	3	3	3	3	3	3		FUSE
24	1088 0037 54			2	2				2	2	2			2	2		POWER SUPPLY TERMINAL
25	1088 0037 50			1	1				1	1	1			1	1		EARTH TERMINAL

PORTLAND COMPRESSOR
Experience You Can Depend On
800-8300

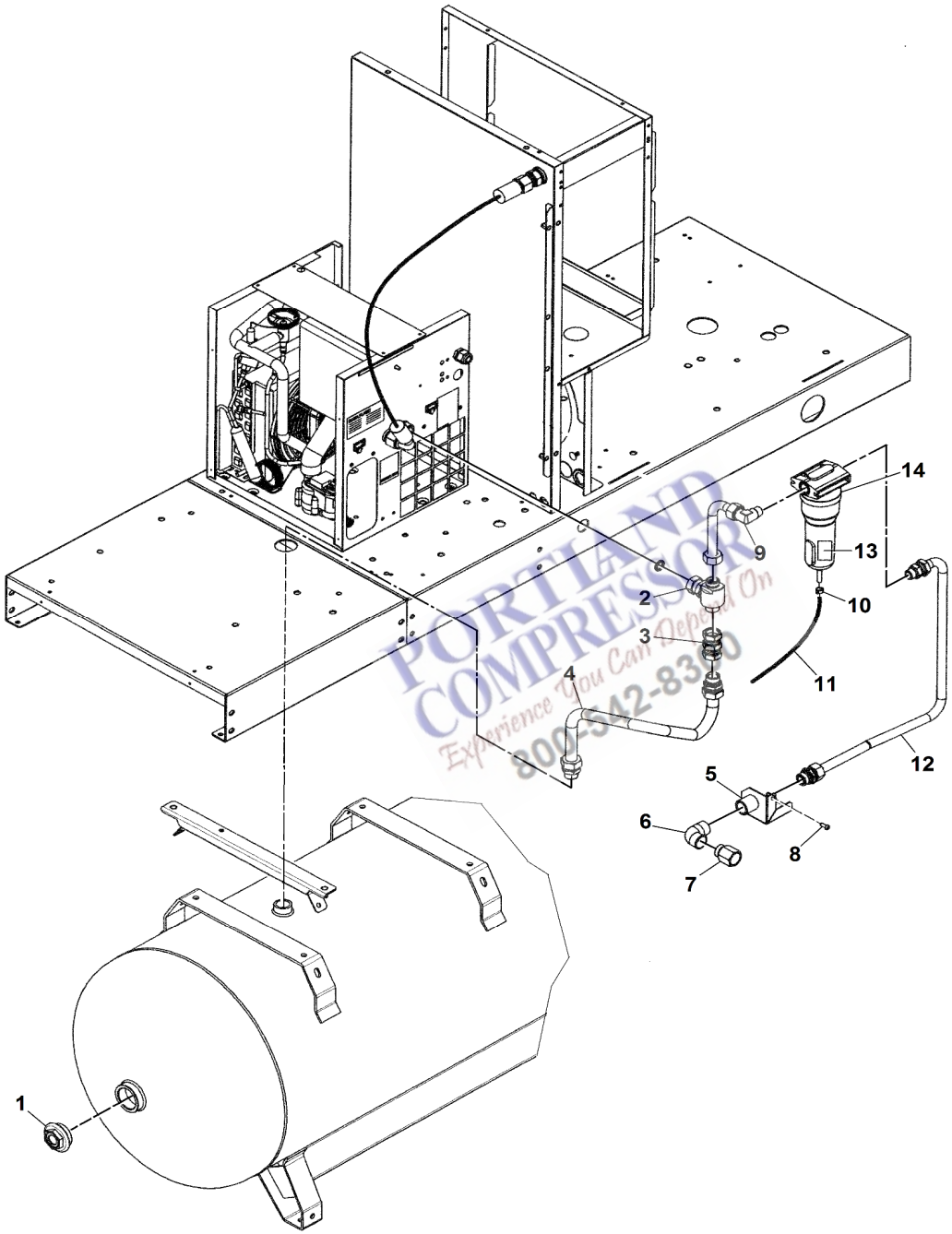

PORTLAND COMPRESSOR
Experience You Can Depend On
800-542-8300

TAV. 35

Option "FILTER DRYER A4-A4+" for TM FF version with transformer

Q.tà - Q.ty - Q.te - Anz. - Cant.

Rif. N. Ref. No Nr. Rèf. Bild Nr. Ref. N.	N. ordinaz. Part. num. Nr. Pièce Teil num. Codigo	HP 10 / Kw 7,5		HP 15 / Kw 11		DESCRIPTION
		4152018665	4152018671	4152018666	4152018672	
1	2200 7509 11	1	1	1	1	PLUG
2	2202 9458 80	1	1	1	1	TEE
3	0606 0000 60	1	1	1	1	COUPLING
4	2204 1597 00	1	1	1	1	PIPE
5	2204 1216 00	1	1	1	1	STIRRUP AIR DELIVERY
6	0560 1306 03	1	1	1	1	ELBOW
7	0606 0000 54	1	1	1	1	FITTING
8	0215 0003 91	1	1	1	1	SCREW
9	2204 1319 00	1	1	1	1	PIPE
10	0347 0104 00	1	1	1	1	CLAMP
11	0070 6002 26	X	X	X	X	HOSE (A MRTERS)
12	2204 1318 00	1	1	1	1	PIPE
13	2204 1305 03	1	1	1	1	LABEL
14	8102 8520 38	1	1	1	1	FILTER ASSEMBLY

PORTLAND COMPRESSOR
Experience You Can Depend On
800-542-8300

TAV. 36

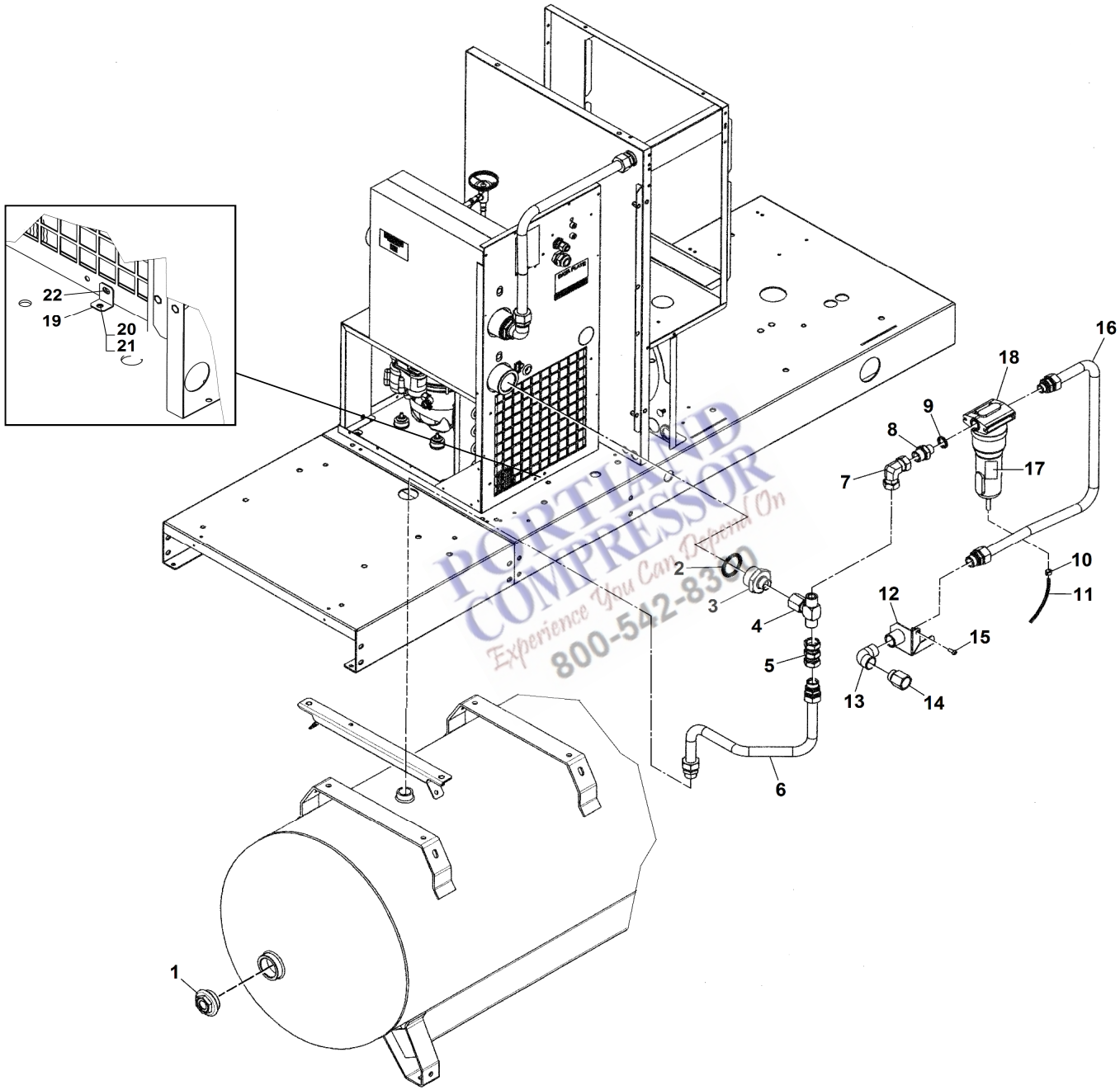

PORTLAND COMPRESSOR
Experience You Can Depend On
800-542-8300

TAV. 36

Option "FILTER DRYER A6/7" for TM FF version with transformer

Q.tà - Q.ty - Q.te - Anz. - Cant.

Rif. N. Ref. No Nr. Rèf. Bild Nr. Ref. N.	N. ordinaz. Part. num. Nr. Pièce Teil num. Codigo	HP 20 / Kw 15 4152018667	4152018673	DESCRIPTION
1	2200 7509 11	1	1	PLUG
2	0661 1000 61	1	1	SEAL WASHER
3	0603 4200 52	1	1	NIPPLE
4	0606 0000 48	1	1	TEE
5	0606 0000 60	1	1	COUPLING
6	2202 7685 11	1	1	FLEXIBLE
7	0606 0000 61	1	1	COUPLING
8	0603 5522 03	1	1	NIPPLE
9	0661 1000 39	2	2	SEAL WASHER
10	0347 0104 00	1	1	CLAMP
11	0070 6002 26	X	X	HOSE (A MRTERS)
12	2204 1216 00	1	1	STIRRUP AIR DELIVERY
13	0560 1306 03	1	1	ELBOW
14	0606 0000 54	1	1	FITTING
15	0215 0003 91	1	1	SCREW
16	2204 1070 09	1	1	PIPE
17	2204 1305 03	1	1	LABEL
18	8102 8520 38	1	1	FILTER ASSEMBLY
19	2202 9273 00	1	1	STIRRUP
20	0215 0003 91	1	1	SCREW
21	0301 2335 00	1	1	PLAIN WASHER
22	0129 3270 38	1	1	RIVET

PORTLAND COMPRESSOR
Experience You Can Depend On
800-542-8300

TAV. 36A

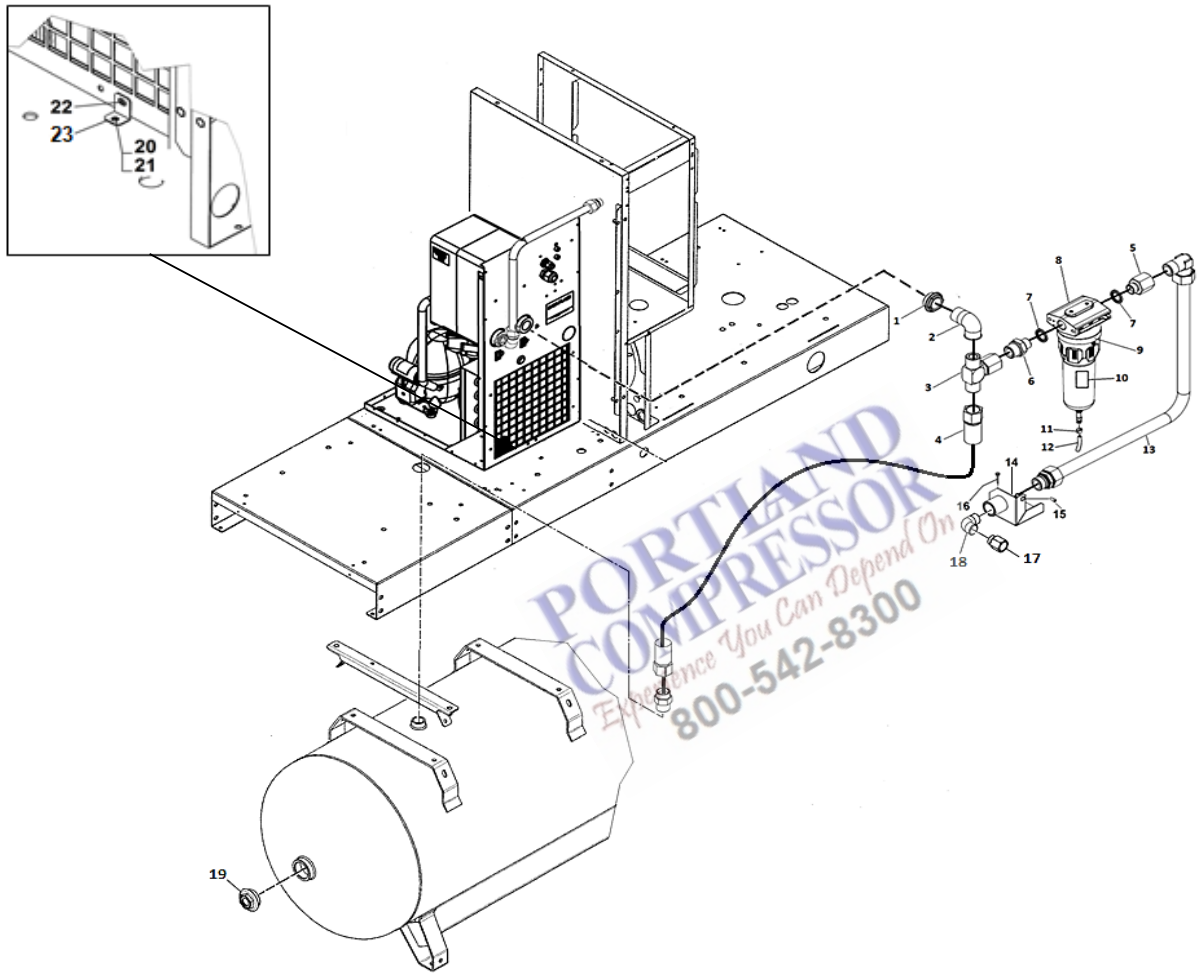

PORTLAND COMPRESSOR
Experience You Can Depend On
800-542-8300

TAV. 36A

Option "FILTER DRYER E6" for TM FF version with transformer

Q.tà - Q.ty - Q.te - Anz. - Cant.

Rif. N. Ref. No Nr. Rèf. Bild Nr. Ref. N.	N. ordinaz. Part. num. Nr. Pièce Teil num. Codigo	HP 20 / Kw 15 4152018667	4152018673	DESCRIPTION
1	2202 9285 02	1	1	REDUCER
2	0560 1306 03	1	1	ELBOW
3	0606 0000 48	1	1	FITTING TEE
4	2202 7685 11	1	1	FLEXIBLE
5	0606 0000 82	1	1	FITTING PIPE
6	0603 5522 03	1	1	NIPPLE
7	0661 1000 39	2	2	SEAL WASHER
8	8102 8520 38	1	1	FILTER ASSEMBLY 3G
9	2258 2931 03	1	1	FILTER
10	2204 1305 03	1	1	LABEL
11	0347 0104 00	1	1	CLAMP
12	0070 6002 26	X	X	PIPE (IN METERS)
13	2204 1070 09	1	1	PIPE
14	2204 1216 00	1	1	STIRRUP
15	0215 0003 91	1	1	SCREW
16	0129 3270 38	3	3	BLIND RIVET
17	0560 1306 03	1	1	ELBOW
18	0606 0000 54	1	1	FITTING PIPE
19	2200 7509 11	1	1	PLUG
20	0215 0003 91	1	1	SCREW
21	0301 2335 00	1	1	PLAIN WASHER
22	0129 3270 38	1	1	RIVET
23	2202 9273 00	1	1	STIRRUP DRYER

PORTLAND COMPRESSOR
Experience You Can Depend On
800-542-8300

TAB. 37 KIT DI MANUTENZIONE / SERVICE KIT / KIT DE MAINTENANCE / WARTUNGSAUFBAUSATZ / KIT DE MANTENIMIENTO

Description	***Type***	***Reference***	***Contains***	***Frequency***
KIT 2000h	HP10-15 / kW7,5-11	**2200 9023 90**	Air Filter elem., Oil filter, IVR filter element	2000h Or annually
KIT 2000h	HP20 / kW15	**2200 9025 91**	Air Filter elem., Oil filter, IVR filter element	2000h Or annually
KIT 4000h	HP10-15 / kW7,5-11	**2200 9028 70**	Air Filter elem., Oil filter, Filter element, Grease, IVR filter element, Separator oil-air	4000h Or annually
KIT 4000h	HP20 / kW15	**2200 9028 71**	Air Filter elem., Oil filter, Filter element, Grease, IVR filter element, Separator oil-air	4000h Or annually
KIT 8000h	HP10-15 / kW7,5-11	**2200 9028 79**	Air Filter elem., Oil filter, IVR filter element, Grease, Filter element, Separator oil-air, Kit unloader, Kit thermostatic valve	8000h Orevery 3 years
KIT 8000h	HP20 / kW15	**2200 9028 80**	Air Filter elem., Oil filter, IVR filter element, Grease, Filter element, Separator oil-air, Kit unloader, Kit thermostatic valve	8000h Orevery 3 years
KIT WEAR DRAIN		**2200 9020 17**	Kit wear LD200-202-203	2000h Or annually

PORTLAND COMPRESSOR
Experience You Can Depend On
800-542-8300

TAB. 37 Tab. huile / Tab. oil / Tab. aceite / Tabella olio / Abb. Öl

Tab. huile / *Tab. oil* / Tab. aceite / *Tabella olio* / Abb. Öl	
Can Rotair	
5 L	**6215 7140 00**
20 L	**6215 7141 00**
209 L	**6215 7142 00**

Can Rotair FOODGRADE (Option)	
5 L	**1630 0821 00**
20 L	**1630 0605 00**
209 L	**1630 0821 01**

Can Rotair Xtra (Option 8000 Hrs Oil)	
5 L	**6215 7148 00**
20 L	**6215 7149 00**

PORTLAND COMPRESSOR
Experience You Can Depend On
800-542-8300

PORTLAND COMPRESSOR
Experience You Can Depend On
800-542-8300

ORIGINAL PART